OUTDOOR FINISHES

GUILD ◆ EDITION

SANDING ESSENTIALS

Woodsmith®

Woodsmith.com

Vol. 45 / No. 267

JUST RIGHT WORKBENCH

Inside:

- Classic Pub Game
- Veranda Chair
- Arts & Crafts Chest
- Limbert Side Table

Woodpeckers®

Precision Woodworking Squares

- One-piece central core.
- Stainless model includes scribing guides.
- Lip keeps the square flat on your work.
- Guaranteed accurate to ±.0085° for life.
- Available in inch or metric.

UNMATCHED ACCURACY LIFETIME Woodpeckers GUARANTEE EST 1986

Precision Woodworking Square
Includes a Woodpeckers wall-mountable wooden case
12" 1281....**$139.99**
12" 1282SS Stainless Steel....**$169.99**
Other Sizes Available on ***Woodpeck.com***

Precision T-Squares

- Scribing guides on 1/16" centers.
- Beveled edge reduces parallax.
- Tight tolerance laser-engraved scale.
- 600mm metric version available.

Precision T-Square
Includes a wall-mountable Rack-It™
TS-12 12"....**$129.99**
TS-24 24"....**$149.99**
TS-32 32"....**$179.99**

Precision Taper Jig

- Repeatable tapers from 0° to 15°.
- Clamps material securely.
- Standard 32" capacity.
- Expands to 48".

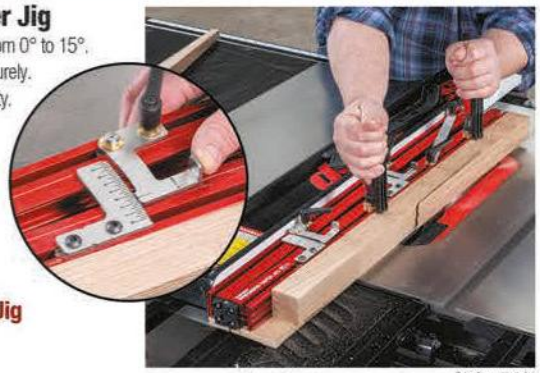

Precision Taper Jig
32"....**$329.99**
48"....**$449.99**

Table Saw not included.

Clamping Squares PLUS & CSP Clamps

- Holds stock at right angles.
- Works inside or outside.
- Works with any clamp.
- CSP Clamps speed the job.

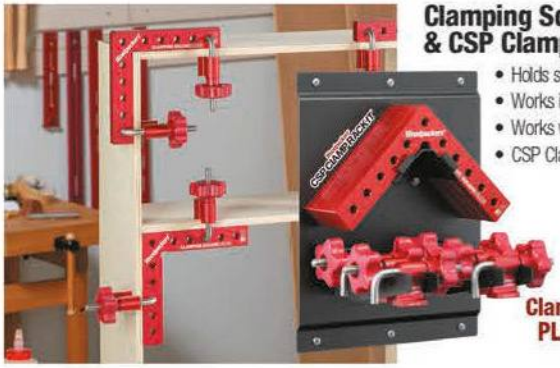

Clamping Squares PLUS Rack-It™ Kit
....**$269.99**

CLAMPZILLA™ 4-Way Panel Clamp

- Applies pressure both directions.
- Works with material from 5/8" to 4".
- Improved vertical pressure.
- Flatter panels faster.

ClampZILLA
18" Capacity....**$159.99**
38" Capacity....**$189.99**
50" Capacity....**$219.99**

EZEdge Corner Plane

- Sole is a perfect 90°.
- 3 radius profiles.
- 45° chamfer.
- Resharpens easily.

EZ Edge Corner Plane
Includes a wall-mountable Rack-It™
1/8", 3/16", 1/4" Radius
-or- 45° Chamfer....**$169.99**
Deluxe Set....**$599.99**

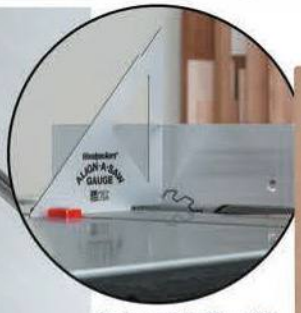

Pairs perfectly with Woodpeckers Saw Gauge

Align·A·Saw System

NEW TOOL

- Plate delivers a flatter, longer reference for aligning table to arbor.
- Precision ground to a flatness tolerance of .002".
- Gives you 12" to check miter groove alignment.
- Gauge measures 90° and 45° accurately.

Align·A·Saw System
Includes a Woodpeckers wall-mountable wooden case
Plate & Gauge Set....**$239.99**
Also Available Individually on ***Woodpeck.com***

Saw Gauge
Includes a Woodpeckers case
Set....**$109.99**

Woodpeckers, LLC • Strongsville, Ohio • 800·752·0725 • ***Woodpeck.com***

Woodpeck.com

MADE IN USA

AUTO-LINE™ DRILL GUIDE

- Perpendicular holes anywhere.
- Fence fits on all 4 sides.
- Works with most drills.
- 1" inside frame.
- 2" capacity outboard.
- Deluxe Kit includes extensions.

Drill not included.

Auto-Line Drill Guide
Drill Guide....$329.99
Deluxe Kit....$429.99

Table Saw not included.

Exact-90 Miter Gauge

- Square cuts every time.
- Miter bar self-adjusts 3/4" slots.
- Micro-adjust flip stop & 45" extension.
- 24" cross-cut capacity on most saws.
- Miter Bar available separately.

Exact-90
Miter Gauge....$329.99
25.5" Miter Bar....$79.99

Table Saw not included.

THIN RIP GUIDE™

- Safe, accurate jig for repeat cutting of thin strips.
- Works with 3/8" x 3/4" T-slot table grooves.
- Easily calibrated scales in both inch & metric.
- Ball bearing contact for smooth feeding.

ThinRip Guide
Includes a wall-mountable Rack-It™
....$169.99

DUAX Angle Drilling Table

- Auxiliary table mounts to your drill press.
- Adjusts to any angle from 0° to 90°.
- Teeth engage for repeatable angles.
- Optional Clamping Kit adds workholding ability.
- Designed to fit most drill presses 12" & larger.
- Ideal for chair and stool projects.

Duax Angle Drilling Table
Duax....$329.99
Deluxe Kit....$369.99

Drill Press not included.

Table Saw not included.

RIP-FLIP Fence Stop System™

- Relocates rip fence perfectly.
- Flips out of the way when not needed.
- Couple 2 stops for perfect fitting dadoes.
- Extra stops & dado couplers available.

RIP-FLIP Fence Stop System
*Fits SawStop**
36" Capacity....$229.99
52" Capacity....$249.99
*Powermatic/Biesemeyer**
30" Capacity....$239.99
50" Capacity....$269.99

Table Saw not included.

AUTOSCALE™ Miter Sled

- Scale accurate at any angle.
- Miter bar fits any 3/8" x 3/4" slot.
- Flip stop with micro-adjust.
- Stop extends to 50".
- Stops for 3-. 4-, 5-, 6-, 8- & 12-sided miters.

AutoScale Miter Sled
Deluxe....$1189.99
Left-*or*-Right Miter Sled....$589.99
Drop Zone....$139.99

StealthStop™ Miter Saw & Fence Stop System

- Stops retract completely within track.
- Micro-adjust provides precise control.
- Installs flat or as a vertical fence.
- Include track, stops, brackets & rule.

StealthStop
Left -or- Right
4' Fence....$129.99
4' Combination....$199.99

AUTOANGLE™ DRILL GUIDE

- Precision drilling without a drill press!
- Drill perfectly vertical or at any angle from 90° to 40°.
- Entry point is constant at any angle.
- Fence & stop system speeds repetitive work.
- Works with most hand drills.

AutoAngle Drill Guide
Standard....$649.99
Deluxe Kit....$749.99

Drill not included.

**NOTE: The Festool, SawStop, Powermatic & Biesemeyer brand names are the registered trademark of the respective company and is not associated with Woodpeckers, LLC.*

*Visit **Woodpeck.com** for hundreds of other American Made Tools!*

Woodsmith®

AN ACTIVE INTEREST MEDIA PUBLICATION

EXECUTIVE EDITOR Phil Huber
SENIOR EDITOR Erich Lage
ASSISTANT EDITOR Rob Petrie

EXECUTIVE ART DIRECTOR Todd Lambirth
SENIOR ILLUSTRATOR Dirk Ver Steeg
SENIOR GRAPHIC DESIGNERS Bob Zimmerman, Becky Kralicek
CONTRIBUTING ILLUSTRATOR Erich Lage

CREATIVE DIRECTOR Chris Fitch
PROJECT DESIGN EDITOR Dillon Baker
PROJECT DESIGNER/BUILDER John Doyle
CAD SPECIALIST/BUILDER Steve Johnson
SHOP MANAGER Marc Hopkins
CONTRIBUTING PHOTOGRAPHERS Chris Hennessey, Jack Coyier

HOME GROUP
ACTIVE INTEREST MEDIA

Woodsmith® (USPS 465-410) (ISSN 0164-4114) is published bimonthly by the Home Group of Active Interest Media Holdco, Inc. The known office of publication is located at 2143 Grand Ave, Des Moines, IA 50312. Periodicals Postage Paid at Des Moines, IA, and additional mailing offices. Postmaster: Send address changes to Woodsmith, Box 37274, Boone, IA 50037-0274.

Woodsmith® is a registered trademark of Active Interest Media Holdco, Inc.
Copyright© 2023 Active Interest Media Holdco, Inc. All rights reserved.
Subscriptions: $29/year, Single copy: $7.99
Canadian Subscriptions: Canada Post Agreement No. 40038201. Send change of address information to PO Box 881, Station Main, Markham, ON L3P 8M6. Canada BN 82564 2911

Printed in U.S.A.

WoodsmithCustomerService.com

ONLINE SUBSCRIBER SERVICES

- **VIEW** your account information
- **PAY** your bill
- **RENEW** your subscription
- **CHANGE** your mailing or e-mail address

CUSTOMER SERVICE Phone: **800-333-5075** weekdays

SUBSCRIPTIONS
Customer Service
2143 Grand Avenue
Des Moines, IA 50312
subscriptions@aimmedia.com

EDITORIAL
Woodsmith Magazine
2143 Grand Avenue
Des Moines, IA 50312
woodsmith@woodsmith.com

ACTIVE INTEREST MEDIA

ADVERTISING SALES DIRECTOR Heather Glynn Gniazdowski
DIRECTOR OF PRODUCTION Phil Graham
VICE PRESIDENT MARKETING SERVICES Amanda Phillips
VICE PRESIDENT EVENTS Julie Zub
V.P. GENERAL MANAGER FINANCE Craig Stille
ACCOUNTING MANAGER Stephen ONeill
DIRECTOR OF RETAIL SALES Susan A. Rose
ADVERTISING DIRECTOR Jack Christiansen
847-724-5633
jchristiansen@aimmedia.com
AD PRODUCTION COORDINATOR Julie Dillon
GRAPHIC DESIGNER Julie Green

PRESIDENT, HOME GROUP **Peter H. Miller**
PRESIDENT, MARINE GROUP **Gary De Sanctis**
CFO **Stephen Pompeo**
CTO **Brian Van Heuverswyn**
CHAIRMAN **Andrew W. Clurman**
CHAIRMAN EMERITUS **Efrem Zimbalist III**

from the editor

Sawdust

One of the main goals of Woodsmith is to get more people exposed to woodworking. The projects and instructions in these pages give woodworkers the confidence to build with success. Once those projects are built, other people get to benefit from the projects — and learn how fun woodworking can be. The table skittles game in this issue offers a great example. It's a lot of fun to play and is a unique game that most people aren't familiar with. I learned about it from a website that chronicles the world of English pub games: "Shove It, Chuck It, Toss It." You can find a link on Woodsmith.com/267. Our Shop Manager, Marc Hopkins, comes from Coventry, England, offering a personal connection with the game.

Back in 2015, we featured a "Gentleman's Dresser" based on an old Stickley design. It's proved to be a popular project. Over the years, John Doyle has adapted the design details for a whole suite of bedroom furniture. The latest iteration: a chest that starts on page 34. As good-looking and fun to make as these are, we're wondering what other projects could come from this look: clock, desk ... what suggestions would you have? Send us your ideas: woodsmith@woodsmith.com. Happy Woodworking.

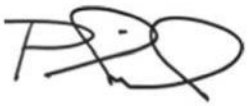

contents

No. 267 • June/July 2023

Projects

toy project

Skittles Pub Game 26

Give game night a boost with a classic English pub game. Building this project involves a little bit of everything: turning, solid wood, plywood, and more.

heirloom project

Craftsman Chest 34

The next project in our Craftsman line of bedroom projects, this chest features solid-wood construction, rugged joinery, and bold lines.

designer project

Limbert Side Table 42

Take a trip down one of the less-traveled roads in Arts & Crafts design. This little gem offers lessons in pattern routing and seamless joinery.

shop project

Just Right Workbench 48

A stout worksurface, plenty of storage, and it all fits into a compact footprint. There's a lot to love about this eye-catching workbench.

outdoor project

Veranda Chair 56

Soak up the sun with a cold drink in your hand while sitting in this outdoor chair you made yourself. Simple construction means you can get it done fast.

Departments

from our readers

Tips & Techniques 6

all about

Power Sanding. 12

woodworking technique

Troubleshooting Drilled Mortises. 18

great gear

New Table Saw & Router Tools. 22

finishing room

Finish for Outdoors 62

Sources 66

Ultimate Jointer Pushblock

With pushblocks, anything that's going to keep my hand away from the blades and the workpiece in position is fine, but a little thought can go a long way. I designed this block to be everything I wanted for the jointer.

I began with the body, gluing it up from five strips of plywood. Cutting the front corner prevents catching on the guard. I shaped the rear handle at the band saw and sanded it to shape. After rounding the edges, I glued it into the body.

Next came the front handle and cleat. For this handle, I simply drilled a hole, rounded the top of the front handle, then glued it in. After rounding the top corners of the cleat, screwing it onto the back to completes the pushblock.

Michael Smith
Altoona, Iowa

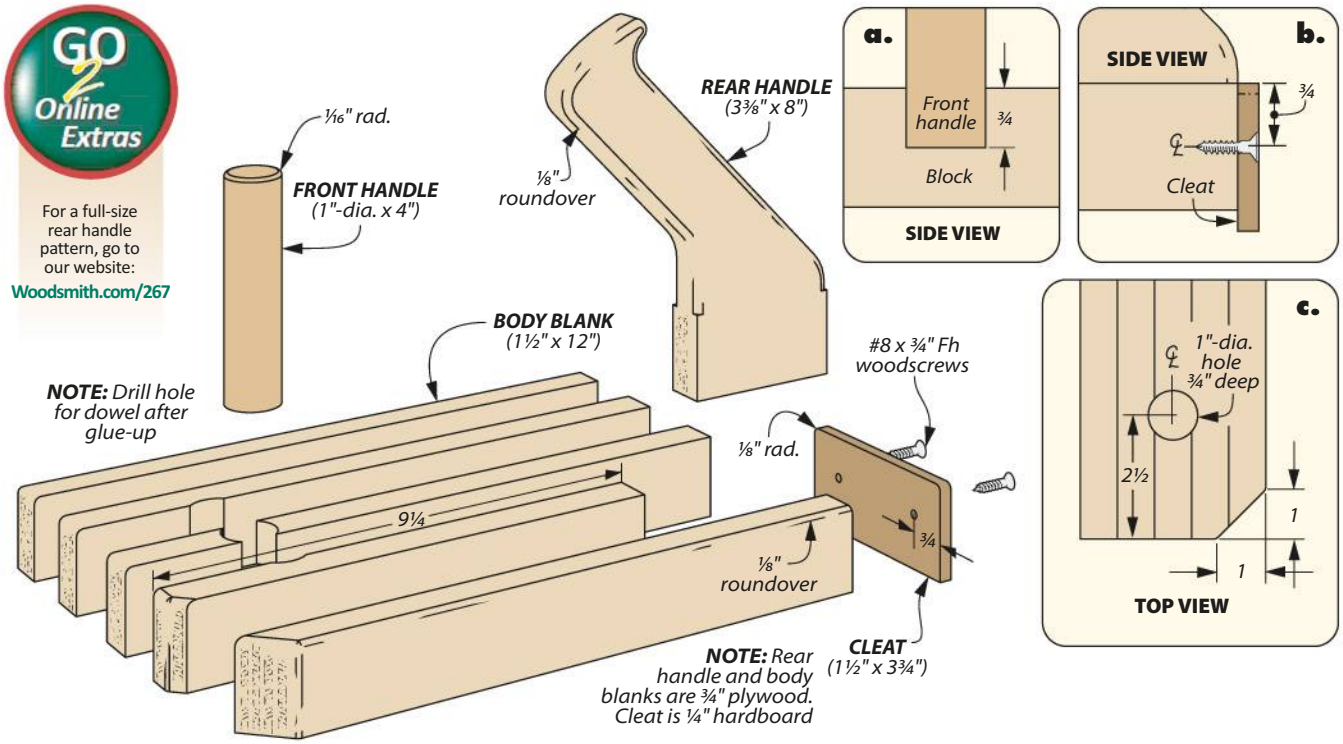

Illustrations: Becky Kralicek

▲ The hardboard attaches to the router base, while the hardwood fence beneath guides the router as you cut.

Quick & Easy Edge Guide

Router guides don't have to be complex. When routing along an edge — for a detail on top of a nightstand for instance — you just need something to register the bit in a straight line along the edge. My shop-made guide is the one you see above, and it couldn't be simpler.

All you need to make one of your own are scraps of hardboard and hardwood. Begin by sizing the hardboard for your router base. It should be big enough to support the whole thing. Next, make a hole matching your bit's position and a little wider in diameter to make sure the bit has clearance. Finally, attach the hardwood fence. This determines the bit's spacing from the edge, so make a test cut to be sure it's on correctly.

Double-sided tape does the heavy lifting here, both on the base and fence. It's strong, especially in terms of shearing, which is the main force applied while you press the fence against the edge. Turn on the router and let the fence guide you for a perfectly spaced cut.

Jared Huber
Appleton, Wisconsin

FUSION MAKER

Starting at $9,995

U.S. PRICING ONLY

- Laser engrave, cut, and inlay wood
- Customize projects for added value
- 24" x 12" x 7" work area
- IRIS™ Camera for artwork layout
- Affordable pricing for entry-level
- Made in the USA

EpilogLaser

888.437.4564 | sales@epiloglaser.com | epiloglaser.com/woodsmith

▲ The adjustable dowel rod allows this stop to fit even if there's a variation in bench hole spacings.

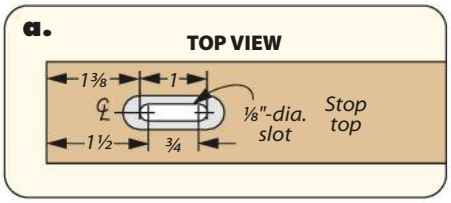

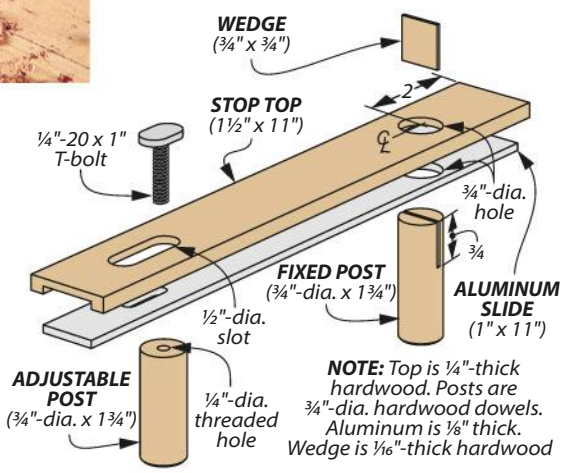

Double-Duty Bench Stop

Bench dogs are some of the most used accessories in my shop. That said, I often need more stability than one alone can provide. What I came up with is the bench dog stop you see here.

This stop is held in place by two dowel posts that fit into the bench dog holes. I based their hole and slot positions off the holes in my bench. One post is adjustable, allowing me to work any direction on my bench. That rod is threaded on a bolt while the other is fixed with a wedge. An aluminum bar reinforces the hardwood of the stop, guaranteeing I won't break it when I really get working.

Drew Schossow
Columbus, Georgia

DIGITAL WOODSMITH

RECEIVE FREE ETIPS BY EMAIL

Now you can have the best time-saving secrets, solutions, and techniques sent directly to your email inbox. Simply go to:

Woodsmith.com
and click on,

Woodsmith eTips

You'll receive one of our favorite tips by email each and every week.

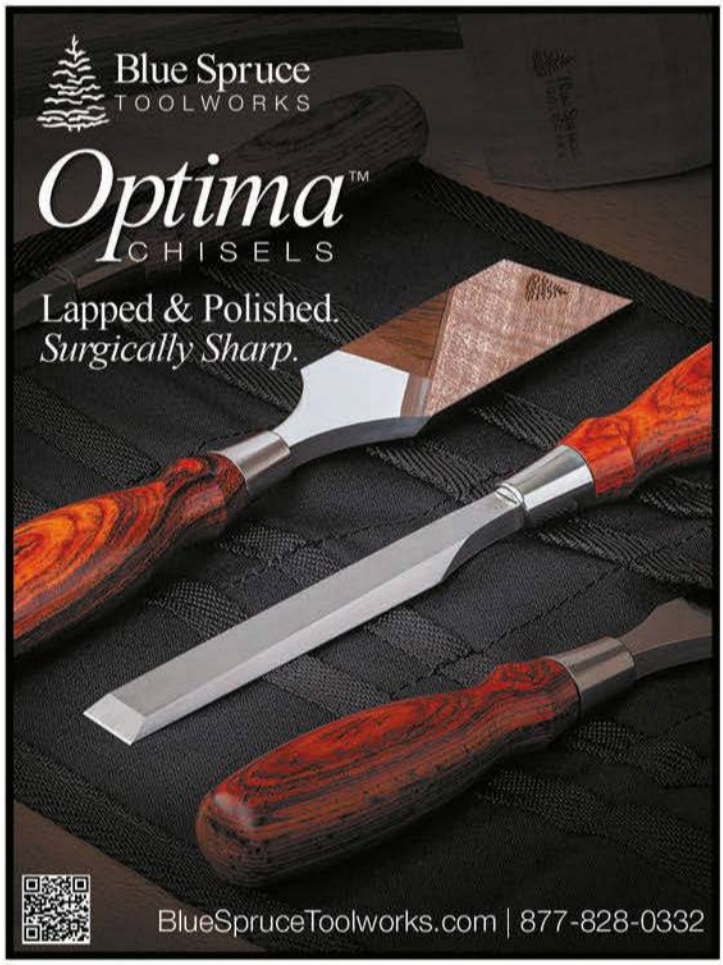
Blue Spruce
TOOLWORKS
Optima™
CHISELS
Lapped & Polished.
Surgically Sharp.
BlueSpruceToolworks.com | 877-828-0332

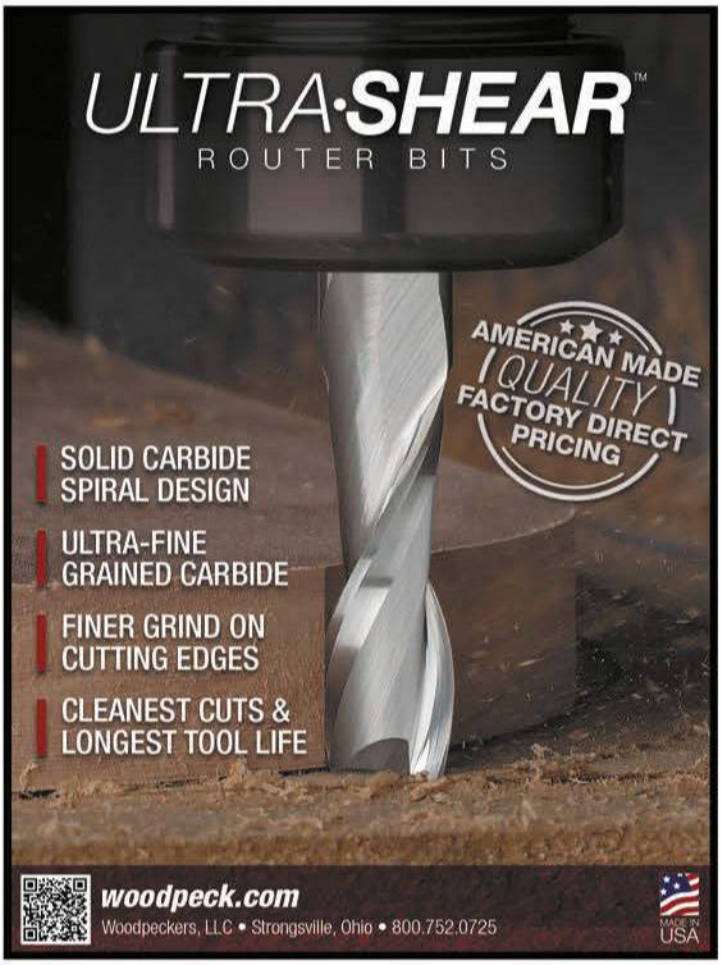
ULTRA·SHEAR™
ROUTER BITS
AMERICAN MADE
QUALITY
FACTORY DIRECT
PRICING
SOLID CARBIDE
SPIRAL DESIGN
ULTRA-FINE
GRAINED CARBIDE
FINER GRIND ON
CUTTING EDGES
CLEANEST CUTS &
LONGEST TOOL LIFE
woodpeck.com
Woodpeckers, LLC • Strongsville, Ohio • 800.752.0725
MADE IN
USA

Woodpeckers®
Slab Flattening
Mill·PRO
• Adjustable height router carriage with built-in dust ports.
• Standard width of 48-1/2" expands to 62" with optional extension.
• Standard length of 59" expands to 132" with optional extension.
• Flatten stock as thin as 3/4" & up to 3-7/16" without shimming.
• Straight-line edges on stock up to 2" thick.
MADE IN
USA
woodpeck.com
Woodpeckers, LLC • Strongsville, Ohio • 800.752.0725
Router not included.

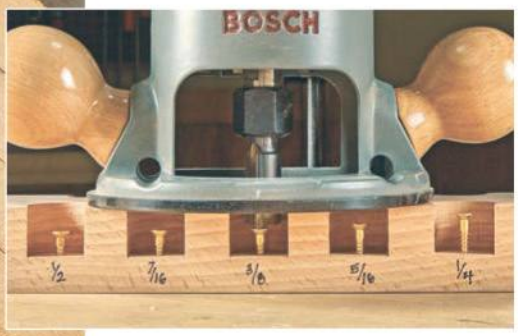

Router Bit Depth Gauge

Setting an accurate depth of cut on a router bit is a fussy task. Precise routing usually takes some test cuts, unless you have a depth gauge. Rather than buy a commercial option though, I figured I could make a better one myself — which is exactly what I did. As you can see, it's just one block with a series of cutouts. I drilled the holes, then trimmed each edge to form the openings. Now it was just a matter setting the heights for the screws.

The screws act as the depth stops. I searched through my collection of miscellaneous screws for ones that would sit about where I want them and have a little extra thread to hold in the wood. After collecting screws and drilling pilot holes, I used a screwdriver and small ruler to fine-tune their heights by hand.

Lynn B. Stoutner
Ames, Iowa

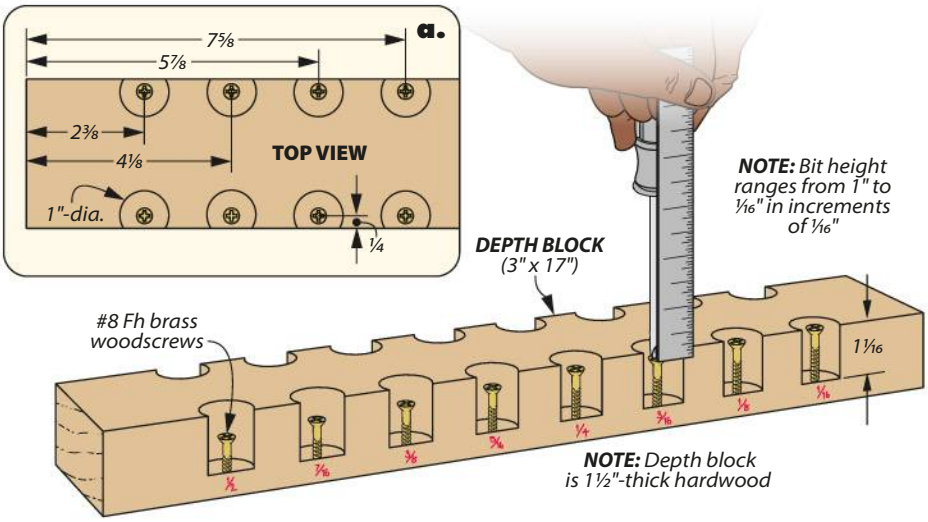

SUBMIT A TIP TO WIN

GO ONLINE

If you have an original shop tip, we would like to hear from you and consider publishing your tip in one or more of our publications. So jump online and go to:

SubmitWoodsmithTips.com

You'll be able to tell us all about your tip and upload your photos and drawings. You can also mail your tips to "Woodsmith Tips" at the editorial address shown on page 2. We will pay up to $200 if we publish your tip.

QUICK TIPS

Epoxy Roller. *Wayne Watson* of *New Braunfels, TX* was brushing epoxy onto a workpiece when he thought up a better method of getting an even coat. Using a thin dowel rod, he poured out a dollop of epoxy onto the piece and rolled it across the surface, like dough with a rolling pin.

Magnet Broom. *Mitchell Landau* of *Green Bank, WV* was tired of picking through piles of sawdust for screws and washers at the end of the day. Instead, he attached an 18" magnet to the front of his broom. After sweeping, he could swipe the magnet side over the pile to collect the bits of hardware.

Bench Dog Vise

A vise is nice for a lot of work, but for those who lack one on their bench, some sawing and planing tasks can be tricky. However, a little creativity can fix the problem right up. As you can see above, I drilled out a hole in a few handscrew clamps, then glued in a dowel the same size as my dog holes. Slipping these in at the end of my bench creates a makeshift vise.

Chris Fitch
Winterset, Iowa

I USE A WAGNER MOISTURE METER BECAUSE:
These are family heirlooms

80% of all problems in wood projects are caused by moisture content issues. A quick and simple, non-damaging moisture meter reading can save you from angry customer calls, unnecessary repair time, and a bad reputation. Call today and learn why Wagner's industry-leading Orion meters may just be the most important tool for your job.

WAGNER METERS (877) 721-8872 | WagnerMeters.com

Power Sanding

When it comes to aggressively removing or shaping material a dynamic-duo comes to mind — the belt sander and its close ally the random orbit sander. Belts and discs are your friend in this battle.

Decades ago I learned how to use a belt sander from a trim carpenter who wielded this powerful tool with the same skill that a sculptor might handle a chisel and a mallet. He used it to sand perfect-fitting miters, scribe the back edge of a countertop to an uneven wall, and trim down doors so they fit their openings perfectly. Watching him work made me realize what a useful tool a belt sander can be — not only on a jobsite, but in my shop at home as well.

VERSATILE. Belt sanders have a couple of things going for them. First, they remove stock very quickly, making them a great tool for leveling a surface or reducing the thickness of a workpiece. And second, belt sanders are portable, allowing you to use them freehand as a shaping tool. But these same qualities also make belt sanders a little intimidating to use. Because they remove stock so quickly, and you have to guide the tool by hand, it's easy to sand a divot in a workpiece, or blast right through the face veneer on a piece of plywood.

BUYER BEWARE. You may be inspired to get one yourself, as I was after watching my mentor (which I still have). I loaded a belt on the tool, adjusted the tracking, and after three passes on a practice board — I sanded the power cord in half. So it's helpful to know a few techniques to make belt sanding a little more foolproof (like keeping track of the cord).

TECHNIQUES

Let's start with some basic belt sanding techniques. The first thing to do is relax and let the sander do the work. Instead of bearing down on the sander, I concentrate on guiding it, letting the weight and speed of the sander work to my advantage. This is why I prefer a heavy

Written by: Erich Lage

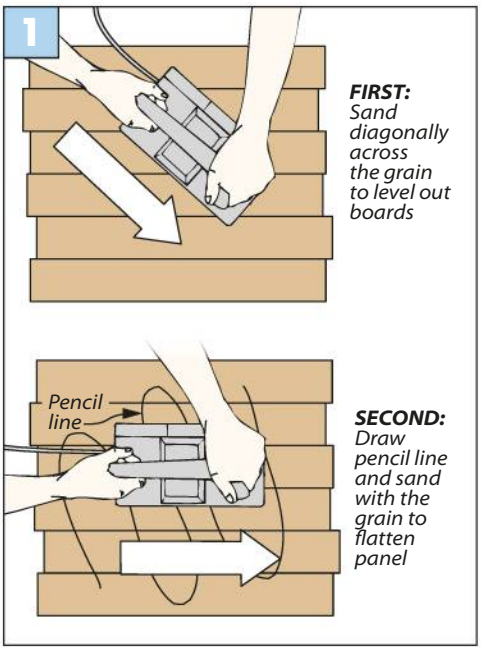

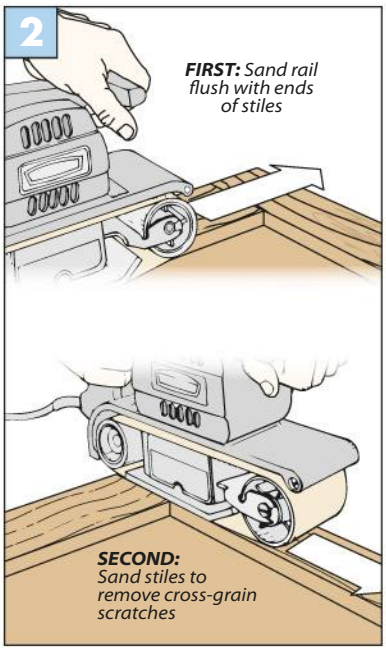

sander when I'm sanding flat, horizontal surfaces.

To avoid burning the workpiece or sanding too deep in one spot, be sure to keep the belt sander moving over the entire surface of the workpiece.

Starting and stopping the sander seems to be where most people get into trouble. That's because it's easy to tip the sander to one side or the other as you lower it down on or raise it up off the workpiece, creating a gouge in the surface of the wood. To avoid this, try to set the sander down gently, as if you were bringing it in for a landing. Once you get the hang of it, you'll find all sorts of uses for it in your shop.

APPLICATIONS

I probably use my belt sander for flattening glued-up panels more than anything else. And the trick to doing this quickly and accurately is grain direction. To rapidly bring all the boards to the same height, I sand diagonally across the grain of the panel first (see top drawing in Figure 1 above). This flattens out all the boards in the panel. The grit I start with depends upon the difference in height between the boards (mostly I start with 100 grit).

Then to level out the entire surface and make it perfectly flat, I sand with the grain (see lower drawing in Figure 1). This time though, I draw a pencil line back and forth across the board. The pencil line serves as a guide as you're sanding. It disappears from the high spots first, letting you know that these are the areas where you need to spend more time sanding. Once all the pencil marks are gone, the panel should be nice and flat.

RAIL & STILE. Another thing that I commonly use my belt sander for is creating flush rail and stile joints. The challenge here is to sand the rails and stiles flush with each other even though the grain is running in opposing directions.

To do this, I sand the rails first, sanding across the grain at the ends of the stiles. Then to remove the cross-grain scratches at the ends of the stiles, I come back and sand the stiles only, staying just shy of the joint line where the rail meets the stile (Figure 2).

ACCESSORIES

One way to improve the performance of your belt sander is through the use of accessories. Many belt sander manufacturers offer a selection of accessories for specific models of sanders to make them more versatile.

These range from dust collector hook-ups to stands that allow you to mount your belt sander upside-down on a bench, effectively turning it into a mini-stationary sander.

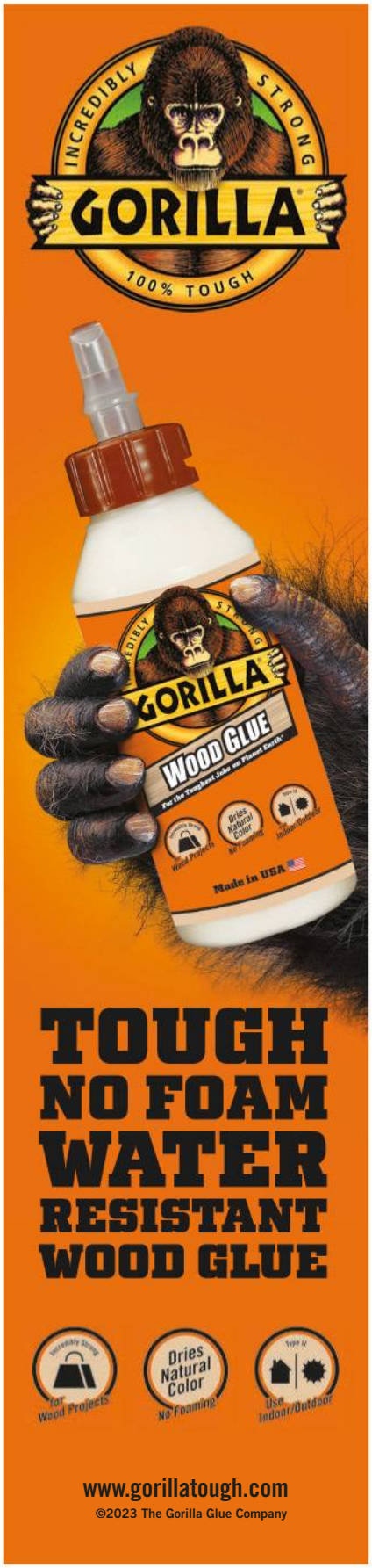

Illustrations: Bob Zimmerman

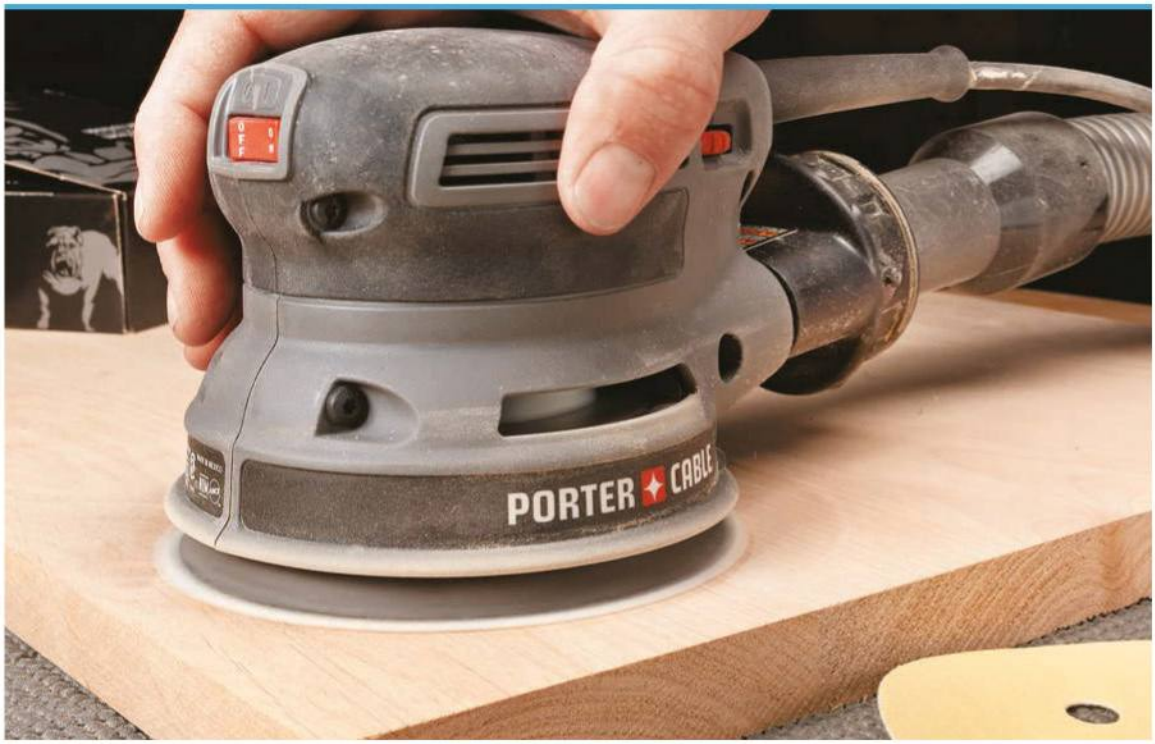

Connecting the sander to a shop vacuum is better than using the canister it comes with.

RANDOM ORBIT SANDERS

A second line of attack behind the belt sander is a random orbit sander. This tool provides a good balance of features to tackle all kinds of tasks. And once you get an idea of its capabilities and limitations, you can use that information to guide your decision for buying other sanders.

FEATURES, NOT BRANDS. Because tool models are always changing, I usually hesitate to recommend a specific brand or model. Instead, I like to look for specific features. So here are the things I feel are important in a sander.

THE SANDING PAD. I look for a sander with a 5"-dia. pad. It's small enough to use one handed but large enough to keep surfaces level (more on that later).

DUST COLLECTION. Also high on my list of priorities is dust collection. Some tasks, like flattening a panel, can generate a lot of dust. Keeping it out of the air (and my lungs) is important. Although all sanders come with some kind of filter, I look for sanders like you see in the photo above — that offer easy hook up to a shop vacuum for more effective collection.

COMFORT. Finally, I look for a sander that feels comfortable. Admittedly, this is the most subjective "feature." You'll need to get your hands on several models to find out which one is a good fit. Some sanders offer two hand positions: a top-mounted handle or a center-body grip.

SANDING DISKS

What makes a random orbit sander so versatile is the variety of disks you can use. (And how easy it is to change disks compared to your belt sander.) I will still rely on the my belt sander if there's a lot of shaping or material that needs to be removed. But many times the random orbit sander will do it all.

FLATTENING. A glued-up panel usually has an uneven joint or two. I use my sander to flatten the panel. The secret is to be bold and use coarse, fasting-cutting disks. For this, I keep a stack of 80- and 100-grit disks. I concentrate on the high spots first, then sand the whole panel to create an even scratch pattern.

The compact versions of random orbit sanders offer good balance and control for long sanding sessions.

Hook & loop pads attach quickly and are reusable. Align the openings to the holes in the pad.

▲ Coarse disks (80- to 100-grit) make quick work of leveling joints and panels. These disks are great at removing finish also.

▲ Sanding disks ranging from 120- to 220-grit to smooth out assemblies and prepare a workpiece for finish.

▲ With fine disks (320-grit and up), abrasive pads, and buffing pads, you can achieve a glass-smooth finish.

SMOOTHING. The job most people associate with a random orbit sander is smoothing a workpiece to prepare it for finish. It's best to be methodical and step from 120- to 150-, 180-, and 220-grit disks. This allows you to sand the perpendicular grain of a frame and panel without leaving deep scratches.

FINISHING. Abrasive pads are great for buffing out oil finishes on large surfaces. Extra-fine, wet-dry disks and thick buffing pads level and polish film finishes perfectly.

As you can see, with the right disks and some strategic grit-tactics, you can use your random orbit sander to save time and get better results.

TUNG OIL WOOD STAIN

Exterior & Interior

NOVA EXO SHIELD

Longest Lasting

Maximum UV Protection
Deep Penetrating Oil

novausawood.com/exoshield

*Cedar outdoor kitchen finished with ExoShield Natural.

STATIONERY SANDER

Wouldn't in be nice to combine the two tools we just looked at? You most likely know where I'm going with this question. The combination of a belt/disc sander is an ideal tool.

In the space of one tool, you get two distinct smoothing and shaping tools in a compact footprint. Belt/disc sanders come in a range of sizes. But for my money, the larger tools are the most versatile. Tools with 9" to 12"-diameter discs and 4" to 6"-wide belts are your best bet for most woodworking tasks.

Once you have the sander in your shop, you're sure to find a variety of uses for it. However, you're faced with a decision. Which part of the tool should you use, the disc or the belt? Both have their advantages, but it takes a few tips and tricks on each to get top-notch results.

START WITH THE DISC. First, I'll cover the disc sander. Then we'll look at getting the most from the belt sander part of the machine.

The advantage of a disc sander is that the metal disc offers a flat, solid reference surface for precision work. It's ideally suited for shaping crisp, smooth surfaces without rounding the edges. The applications run the gamut from smoothing convex curves and radii to trimming project parts to length and is great for fine-tuning miter joints.

▲ The disc sander portion of the tool shines at creating smooth corners that are square. The disc's speed increases from the center to the outer edge giving you options on how aggressively you want to remove material.

THE RIGHT GRIT. Even though a disc sander is used for accurate work, that doesn't mean you need a fine-grit sanding disc. On the contrary, I find that an 80-grit or 100-grit disc is ideal. These discs work fast and run cool while still leaving a smooth surface to work with.

THE RIGHT SIDE. When it comes to using a disc sander, you have to work from the correct side. Always work on the side where the disc rotates down into the table. (Not all disc sanders rotate in the same direction.) Working this way means the rotation of the disc helps hold the workpiece in place on the table.

CUT, THEN SAND. To take best advantage of using a disc sander, you should think of it as a precision refining tool rather than a coarse shaping tool. So unless you're shaping a small radius, it's faster and more efficient to cut away most of the waste with a jig saw or the band saw.

SPEED ZONES. There's another aspect to sanding in different places along the disc. The outer portion of the disc is moving at a faster surface speed compared to the inner portion of the disc. In fact, the outside of the disc is moving twice as fast as the portion that's halfway from the center of the disc. To put that to use, I use the faster-moving outer part to remove material quickly, as shown in the upper right photo. Then I move to the inner part to fine-tune the work as I approach the layout lines. Now lets' swing around to the other side and look at the belt.

▲ Meanwhile the belt sander side can be use with the fence you see here to smooth large surfaces. The fence can be turned at an angle as well.

BELT SIDE

A tool with a 4"- or 6"-wide belt gives you a good capacity and the power to handle a wide range of operations. A belt sander works great for the middle parts of your woodworking tasks. It shines for refining shapes rather than heavy stock

removal. The surface it leaves will be fairly smooth; however, you still need to do additional sanding to get a finish-ready surface.

BELT OPTIONS. Sanding belts are available in a wide range of grits. I usually keep a 120-grit belt on the machine. It sounds coarse, but it does a good job of quickly removing material, running cool, and leaving a consistent surface behind. I find that it's too easy to burn a workpiece with higher-grit belts to make them worth the effort to buy.

SAFE LANDING. About the only tricky aspect of using one is learning to "land" a workpiece on the belt without gouging the workpiece. The key is easing the workpiece onto the belt with a steady, but not with a white-knuckled, grip. Don't worry, you'll get the hang of it in no time.

Part of what makes the belt sander so handy is all the ways you can configure it to suit different needs. Let's take a look at a few of the setups.

HORIZONTAL SANDING. I use the horizontal position for creating a flat surface on all kinds of project parts. It can be wide pieces and completed assemblies down to parts that are too small to safely run across at a jointer.

You can use the sander "freehand" in this configuration especially for working on complex shapes. However there are a couple of accessories that can increase your control over the workpiece and help to achieve consistent results.

FENCE. The first is the fence. It's used just like the fence on a jointer. With it, you can keep a workpiece square to the belt as you're sanding (see photo at bottom of previous page).

You can also angle the fence. While it looks strange, the angled fence setup is great for flattening boards or panels that are wider than the belt.

END STOP. The other accessory used in horizontal sanding is the end stop. It's a metal bar runs across the back end of the belt. I use it as a way to pivot a workpiece onto the belt without worrying about the belt grabbing the part and pulling it away.

END SANDING. One surprising operation is to use a belt sander to refine and smooth an inside (concave). The way to do that is to flip up (or remove) the upper/end guard and use the idler drum. It works similar to a sanding drum on a drill press. But you're limited to curves that match or are larger than the radius of the drum.

UPRIGHT. In addition to a horizontal arrangement, the sanding belt can be rotated into a vertical position. Why bother switching things around? A vertical setup makes it easier to control a workpiece while sanding the ends. I use this setup for sanding small projects and also for refining outside curves.

The operation of the vertical position is similar to the disc sander side. However, you can work with wider parts on the belt since you don't need to worry about the piece contacting the upward rotating half of the disc.

When it comes to power sanding, you've got options. You can always start with the hand held duo of the belt sander and random orbit sander. Then graduate to the stationery shop sander when the budget allows. W

TAKE YOUR BUSINESS TO HIGHER PROFITS, PRODUCTION, AND POSSIBILITIES

WITH WOOD-MIZER'S GROWING LINE OF WOODWORKING EQUIPMENT

©2023 Wood-Mizer LLC
*Prices in US dollars & subject to change.

BUILT IN THE USA SINCE 1982

Financing Available!
woodmizer.com
866.238.4425

Wood-Mizer
from forest to final form

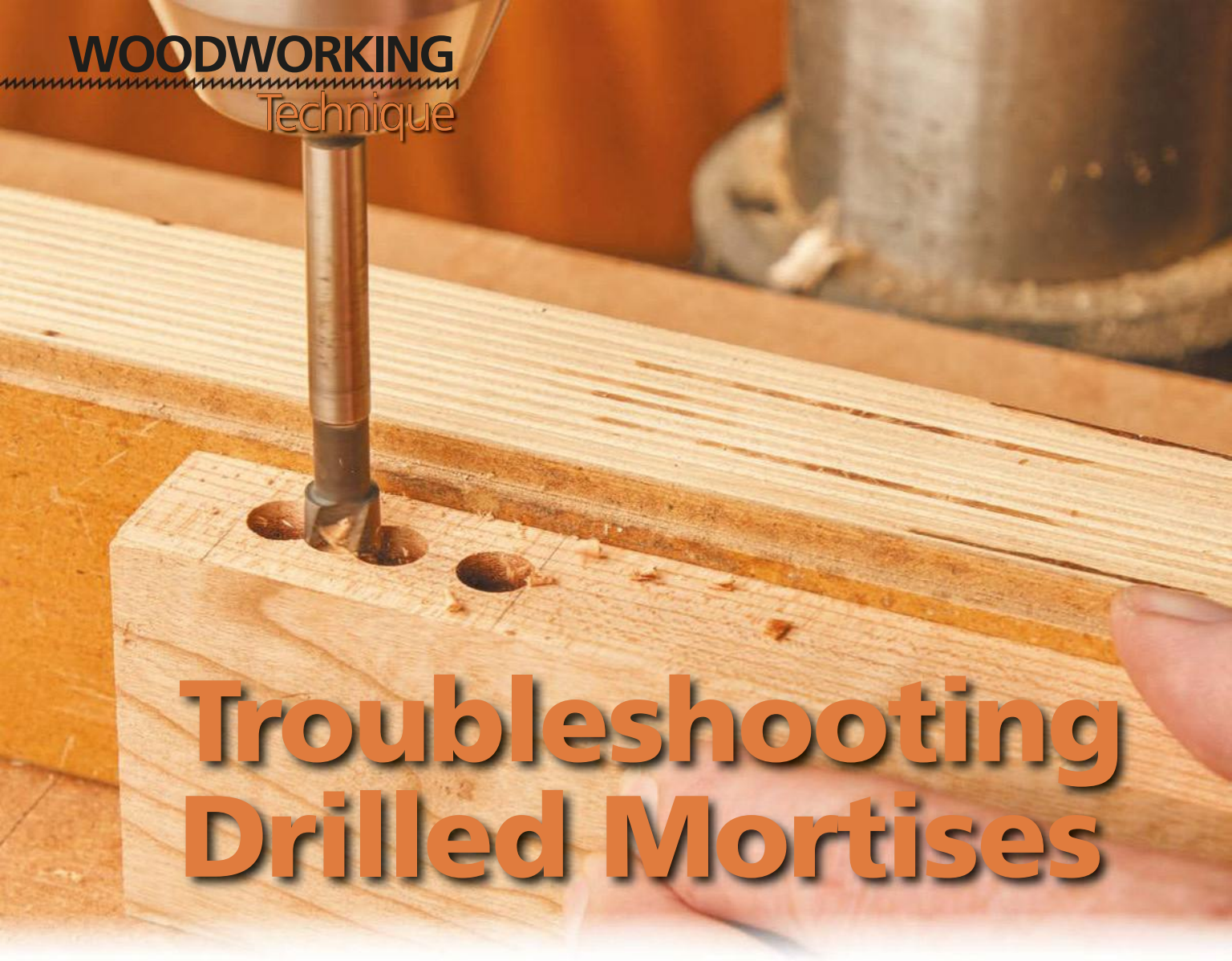

Troubleshooting Drilled Mortises

▲ Small Forstner bits clog easily. Brad point bits are a better solution for mortises less than 3/8" wide.

In my shop, the drill press is one of my top three shop machines. I value it for the wide range of tasks it's capable of performing. One important operation is helping to create mortises for mortise and tenon joinery — the drill press is used to remove most of the waste. A little cleanup work with a chisel or two completes the mortise.

This mortise-making approach is often shown in the pages of *Woodsmith*. That's because it uses tools found in many woodworking shops and is easy to learn.

All too often, a woodworking task that seems simple or straightforward lulls you into the process heedless of the pitfalls. Let's look at a few of the common problems that bedevil drilled mortises. By the end, you'll have a good idea of how to refine the process and create consistently sized mortises, taking full advantage of the capabilities of your drill press.

CLOGGED BIT

The usual instruction for drilling out mortises is to use a Forstner bit. These bits leave a flat bottom and can make it easy to drill overlapping holes (within reason). This is sound advice — for the most part.

For furniture projects, a 1/4"-wide mortise is a common size. However a Forstner bit that small clogs almost instantly when trying to drill a deep mortise (photo at left).

Instead, I prefer a brad point bit for narrow mortises. The flutes easily clear out chips, and you still get a reasonably flat-bottomed mortise. The mortising technique changes up only slightly. (I'll get to that topic shortly.) The key to using a brad point bit is to turn up the speed of the drill press.

Written by: Phil Huber

For bits up to 3/8", I set the speed at 2000rpm.

MISALIGNED HOLES

One of the primary advantages of using a drill press to rough out a mortise is that you can employ a fence to drill a line of holes — in a straight line. Maintaining consistency is important when you have a number of mortises to make. But as you can see in the left photo, the workpiece may wobble and the holes can end up off course. Even a slight variation can affect the resulting mortise width. This means the tenon that fits the mortise needs to be slightly thicker, complicating the tenon-making process.

Thankfully, the solution is straightforward. Clamp a support to the front side of the workpiece, as you can see in the right photo. The support block should be snug enough to keep the workpiece from drifting away from the fence, but still allow you to slide the piece along the fence for the mortising technique I'll highlight.

Admittedly, I don't use a support block all the time. It all depends on the situation, the size of the workpiece, the size of the mortise, and how the bit is cutting. It's one of those solutions to keep in your pocket, ready for when the need arises.

▲ If a workpiece drifts away from the fence even slightly the result is a mortise that ends up a little wider than intended.

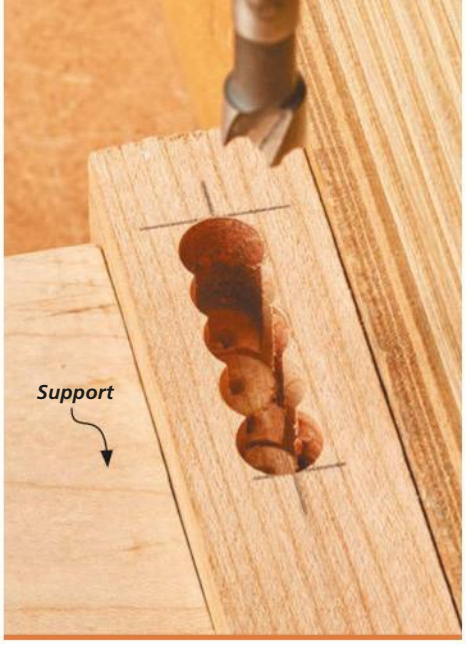

▲ Clamping a support in front of the workpiece keeps the holes consistent and the mortise closer to the specified size.

▲ When using a Forstner bit, I aim to leave around half the diameter of the bit between holes. This provides plenty of support for the bit to clear away the waste.

▲ Brad point bits require a little more material to prevent the bit from deflecting to one side or the other. Here, I leave a little less than the full diameter of the bit between holes.

THE CORRECT ORDER

"Drill a row of overlapping holes to remove most of the waste." That's a common way of describing the process of mortising with a drill press. I view it as more of a shorthand version. Taken too literally, you can have trouble with the bit deflecting. I break up those instructions into a series of three (sometimes four) steps. The order of operations I've settled on is shown in the steps below.

Before heading to the drill press, you need to do a little layout work. Mark the ends of the mortise on the workpiece along with the mortise's centerline. The centerline helps me line up the bit and set the fence.

DISCONNECTED HOLES. Install a bit that matches the width of your mortise. Fire up the drill press and drill a hole at each end of the mortise. Now rather than working down the line, I drill a series of holes that are spaced apart from each other, as you can see in Step 1.

PROPER SPACING

How far apart should the holes be? That depends on the type of bit you're using. The upper photos give you the ideals for Forstner and brad point bits.

In my mind doing this helps "balance" the bit and prevents it from deflecting. Keeping a similar amount of waste (front and back) and voids (side to side) helps the bit stay the course.

Keep in mind that depending on the length of the mortise, the math may not work out perfectly every time. The concept is to leave more waste between holes when using a brad point bit and less with a Forstner.

▲ The mortise starts by drilling a hole at each end of the mortise. Then drill holes that leave some waste in between. See the upper photos for details.

▲ On the second pass, drill down through the waste between the first set of holes. You should be left with a caterpillar-like row. But don't stop drilling just yet.

▲ Line up the bit with the remaining nibs for a third (and even fourth) pass. By the time you turn off the drill press, the sides of the mortise should be pretty straight and smooth. Now that's a mortise.

CONNECT THE DOTS. We'll join the holes together with a second pass. Center the bit over the waste between a pair of holes, and plunge the bit, holding the piece securely. The result is a line of holes that resembles a caterpillar (Step 2).

You'll notice that the drilling is easier since the chips created by the bit spill into the already drilled holes on either side. Take a moment to clear out the debris so you can see your progress.

WAIT, YOU AREN'T DONE

You may be tempted to stop right here — that's sometimes implied in other instructions where you then smooth the sides and square up the ends with chisels. I'd advise against that.

The point of using the drill press is to use its power to remove as much waste as possible, while creating a straight mortise. So keep it up.

Step 3 shows the result after making a third and fourth pass. Position the bit over the triangular bits of waste and make another set of passes down the length of the mortise. With each pass, the size of those "nibs" of waste gets smaller.

After four passes, the walls of the mortise look surprisingly smooth. What's more, by taking these extra passes, all of your mortises will be more consistent. The tenons will be easier to fit and your project will be stronger and look better, too.

The amount of time it takes to make these cleanup passes is pretty short. I don't spend time in my shop to work as fast as I can, but I do enjoy taking the fullest advantage of the tools I have in the shop.

There's one last thing to take care of. You'll notice that the ends of the mortise are still rounded. For that, you'll need to head to the bench and grab a chisel — and read the box at right. W

WRAPPING UP THE MORTISE

Final Steps. With the approach I outline, the mortise is in pretty good shape once you step away from the drill press. In fact, you could make a good argument that the mortise is complete. Rather than square up the ends of the mortise, you could round the end of the tenon. The sides of the mortise may look a little rough, but once you test fit the tenon once or twice any remaining nibs will be worn down. If you'd rather square up the ends, take a look a the photos below to see how to get the job done with a few mallet blows.

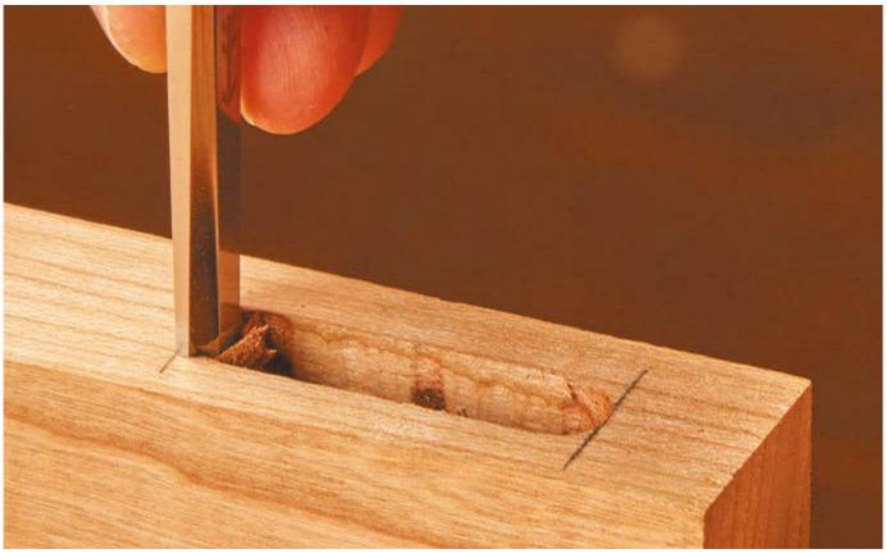

▲ Line up a chisel that matches the width of the mortise with your end line. The bevel should face the mortise. With firm mallet blows, drive the chisel straight down until you feel (and hear) it reach the bottom of the mortise.

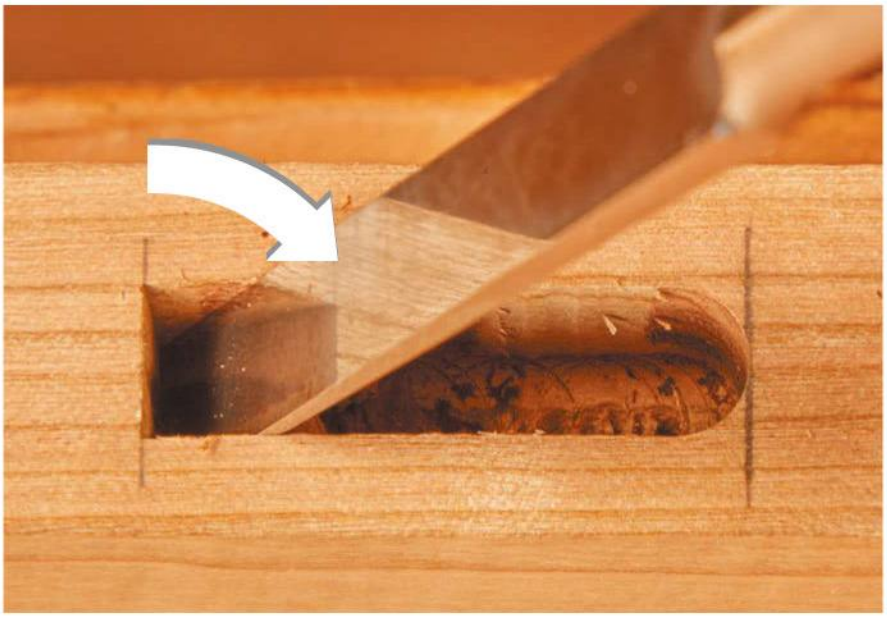

▲ Lever the chisel back into the opening of the mortise. This loosen the remaining waste at the end of the mortise. The sides of the chisel scrape the side walls smooth. Only a small triangle of waste is left at the bottom of the mortise to clear away.

Edges & Profiles

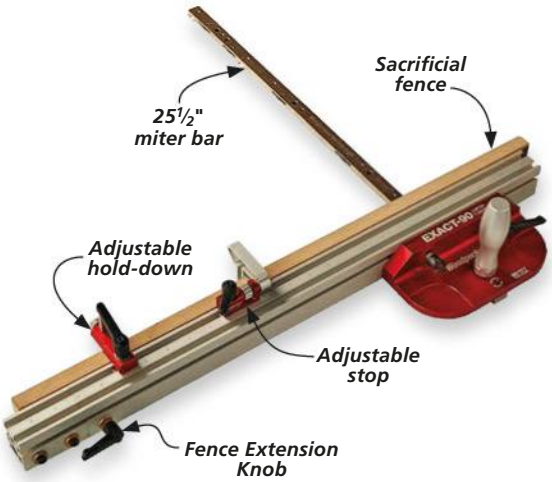

▲ Woodpeckers' Exact 90° Miter Gauge is great for cutting panels, crosscutting both wide and long boards, and making consistent, identical cuts.

Whether it's a straight rip, a perfect, 90° crosscut, or a rounded edge, the quality of a board's edge often matters just as much as the joinery that will hold them together. If it's a piece on the interior, a quality profile means a square assembly. If the profile is exposed, then it's something you know you'll be looking at for years to come. Either way, a good edge matters.

This article covers a trio of tools to get your workpieces to the right size and shape. The *Woodpeckers'* miter gauge is a dedicated crosscutter, and good at it too. The pushblocks from *Microjig* are handy for any rip cut, but especially useful on narrow pieces. And, to help deal with those corners, a *Kreg* router jig closes up the rear, offering a convenient way to rout corners with a flush trim or pattern bit, whether you're working on a router table or routing by hand.

EXACT-90° MITER GAUGE

The *Exact-90° Miter Gauge* from *Woodpeckers* does exactly what it says on the box. It's a fantastic miter gauge, but some people may have a complaint: it only cuts at 90°. In my opinion though, that's a good thing. This miter gauge isn't trying to be the

Written by: Rob Petrie

jack of all cuts. It cuts a precise 90°, and it does it well.

MITER BAR. The first thing you'll notice on this gauge is the bar. The miter bar measures in at 25½" long. With that length, it excels at crosscutting wide boards that might otherwise be reserved for cutting on a sled. Additionally, the gauge runs smooth, and the bar stays tight in the miter slots across a variety of table saws. This is due to the leaf springs in the right side of the miter bar that press against the slot, keeping it tight no matter the exact width.

An adjustable flop-stop slots into the fence's T-track and keeps the miter gauge upright.

As some of you may have already imagined, a piece that makes use of this miter bar's full length will usually flop as you try to line up the cut, but *Woodpeckers'* miter gauge comes with an interesting solution. An adjustable "flop-stop" (photo at upper right) slots into the miter gauge and can be tightened down to support the gauge on wider peices, allowing you to prep for the cut and turn on the saw without wrestling the the gauge into slot.

FENCE. A good fence is a key component to a good miter gauge, and the fence here brings a lot to the table. The first thing you'll notice is the sacrificial fence that comes with the gauge. It's tightened onto the T-track at the front of the aluminum fence, and provides a "zero-clearance" backing to prevent chipout.

▲ The miter gauge features an adjustable, flip-down stop for repeated cuts. The stop (made of extruded aluminum) locks into the gauge's fence when flipped down (shown in the left photo above).

The second big feature of this fence might go unnoticed until you start fiddling with some of the levers. By loosening one on the back of the fence (upper right photo below) you can slide out the fence extension. This slide can extend all the way out to 45", and with the T-track on the end it can also be used to set the adjustable stop. Now let's take a look at the highlight of this gauge.

ADJUSTABLE STOP. The one feature I appreciated the most on the *Exact-90° Miter Gauge* was the adjustable stop. The stop itself is a piece of extruded aluminum with a small tab that slots into the fence, preventing it from wiggling when in place. The stop attaches to the fence's T-track with a T-bolt and a threaded lever. The stop can then be flipped up or taken off when it's not needed.

The highlight here to me though is the microadjust screw (lower right photo below). I can while away a good portion of my time in the shop trying to get the perfect setup for a dado, and doubly so when I'm also trying to clamp a stop block in place for cutting multiple pieces. Despite that, I found this stop easy to get right, and after a few test cuts I was satisfied enough to do the real thing.

▲ With the flop-stop and fence extension, this gauge supports crosscutting pieces up to 24" long and 45" wide.

Illustrations: Bob Zimmerman

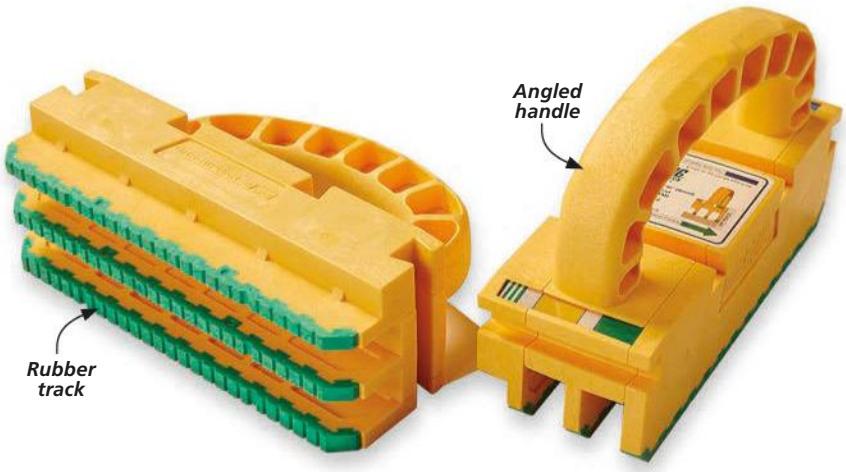

▲ Microjig's pushblocks are a user-friendly accessory that make a variety of operations safer, but they really shine when ripping thin strips of stock for trim or edging.

▲ The color index attaches to your saw's fence ruler and lets you check to make sure you won't cut the gripper.

GRR-RIPPER2 GO

Safety may not be the sexiest topic in the shop, but it's an important one. Push blocks are one of the key finger-savers, and while I have a menagerie of shop-made blocks around, a new twist is always welcome.

Microjig's *Grr-ripper2 Go* is all the things most commercial push blocks are, with a few added features. At its heart, the *Grr-ripper2 Go* is a bare-bones version of *Microjig*'s *Grr-ripper 3D Pushblock*, and for that I like it even more. I'm not often a fan of accessories with too many bells and whistles. While they can be useful, I find all the features get in the way more often than not. The *Grr-ripper2 Go* however has no adjustments, and a clever way of quickly making sure your cuts are aligned.

THE BRIDGE. Taking a look at the photos, you can see that the push block is shaped like a double-arched bridge with a slight offset on one side. The bottom of the legs feature strips of rubber tread to grip the workpiece. I like this grip style because it allows me to control the board at its center. Most push blocks or sticks use a notch or cleat to register against the back end of the board — where you have the least control. When using the *Grr-ripper2 Go* to push from above however, at the center of the board, I felt much more in control of the cut.

▲ This pushblock can safetly rip strips as thin as 5/16", and the color index makes it easy to use on wider cuts.

▲ Multiple blocks keep pressure even when ripping long boards and quickly register against the fence.

The grip also allows for a steadier cut. On many pieces I have to reach for the stop block once the end of the board is on the table so it can register the notch or cleat. That pause as I readjust can result in the cut being uneven, or the blade scorching the edge of the workpiece. With the overhand grip however, I can make most rip cuts without pausing.

THE COLOR INDEX. A big selling point for the *Grr-ripper2 Go* is the color index (upper right photo). This is a colored, transparent sticker that goes over the ruler on your table saw. The colors on the index coordinate with the colors on the front and back of the push block, letting you know where the clearance between the legs is.

All in all, the *Gripper2 Go* is an easy to use accessory that can help with all rip cuts, but shines on narrow pieces. When ripping long, narrow stock, like hardwood edging, it offers excellent control while keeping your hands well out of the way.

CORNER ROUTING GUIDE

The last item on our list is the *Corner Routing Guide Set* from *Kreg*. As the name implies, this set will guide a flush trim bit to rout a radius or chamfer onto the corners of a workpiece.

The set consists of a baseplate, four stop posts, and eight different profiles of common sizes. The profiles snap in and out of the baseplate, and the stop posts can be adjusted to fit your piece.

The principle of a corner routing guide is simple — all you need to rout a corner is a guide to register the bearing off of. To use the set, chuck a flush trim bit into your router table and select the desired corner profile. Adjust the stop posts so that four points of contact are being made. Two of the posts are adjustable along a slide, threading in to lock in place. With the posts positioned, you can begin routing by removing the waste up to the guide (as in the inset photos at right). Once the guide makes contact with the bearing, just follow the profile. The guide also works with a handheld router — simply clamp down the piece and guide, then rout from above using a pattern bit rather than a flush trim bit.

Despite its simplicity, I consider *Kreg's Corner Routing Guide Set* a good purchase for its sheer ease of use. While I'll always be tempted to ask for more options, the profiles will likely cover most of the work you do. The stop posts make aligning the guide easy, and being usable by both those with a router table and those without is a big plus. W

▲ The set comes with eight profiles: five sizes of radii and three sizes for chamfering. These profiles snap into the baseplate.

▲ Begin by routing the waste freehand, as in the inset photos above. Remove the waste in several passes, until the bearing makes contact.

▲ Once the bearing touches the guide, follow the profile. The set comes with profiles for both chamfered and rounded corners.

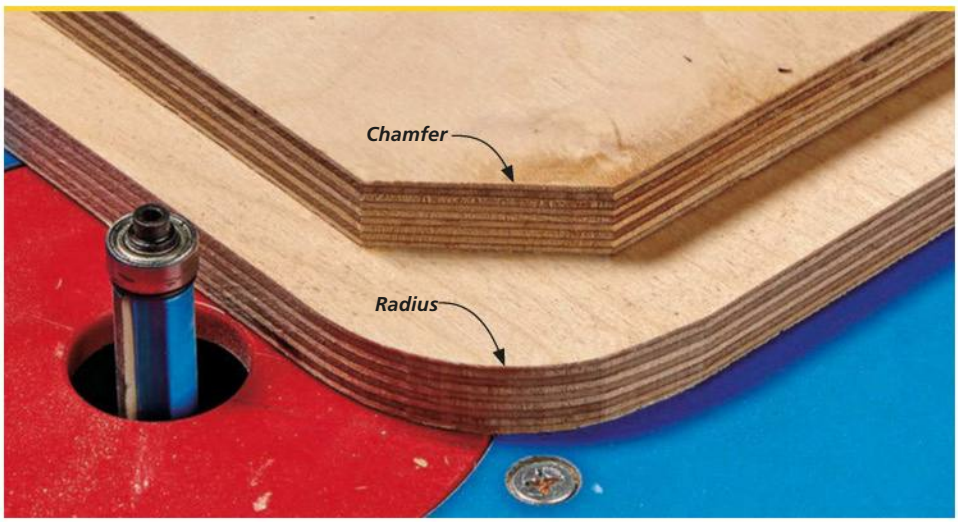

▲ A chamfer or radius is an easy way of adding interest to an otherwise simple corner. As you can see above, the guide set provides clean results. While one or two more sizes of chamfer would be nice, the radius and chamfer profiles that are there cover a majority of my work.

Table Skittles Game

Written by: Rob Petrie; Project Design: Dillon Baker

A laminated playing field is fronted by a round, hardwood nose, shrugging off any low-flying shots.

▼ The trademark striped edging of Baltic birch acts as an accent to the painted surfaces and hardwood playing field at left.

Illustrations: Becky Kralicek

This classic English pub game is a chance to flex all of your woodworking muscles, from joinery to turning.

Although the name may evoke sugary thoughts today, the game of skittles is one of the oldest pastimes still being played actively. It's thought to have originated in medieval England as a game called either lawn skittles or alley skittles, depending on where it was being played. Over the centuries it took on a variety of forms: Irish skittles, Dutch pins, American bowling, and versions to be played indoors ranging from tabletop setups to the full-size game you see here.

To be precise, this particular style of skittles is called hood skittles — named for the hood that keeps wayward throws from breaking a glass across the room. The game consists of throwing three "cheeses" at nine pins, trying to knock down as many as possible. Bowlers should be familiar. Like a pool table or a dart board, it's the kind of game that's meant to be enjoyed with friends — and possibly a beer or two. The project provides a variety of woodworking: hardwood joinery at the base, shaped plywood up top, a laminated hardwood playing field, routed cheeses, and turned pins. It's a buffet of woodworking skills, and it's as enjoyable to make as it is to play.

▲ Americans may notice some similarities to bowling here, and they'd be right — skittles is the grandad of bowling.

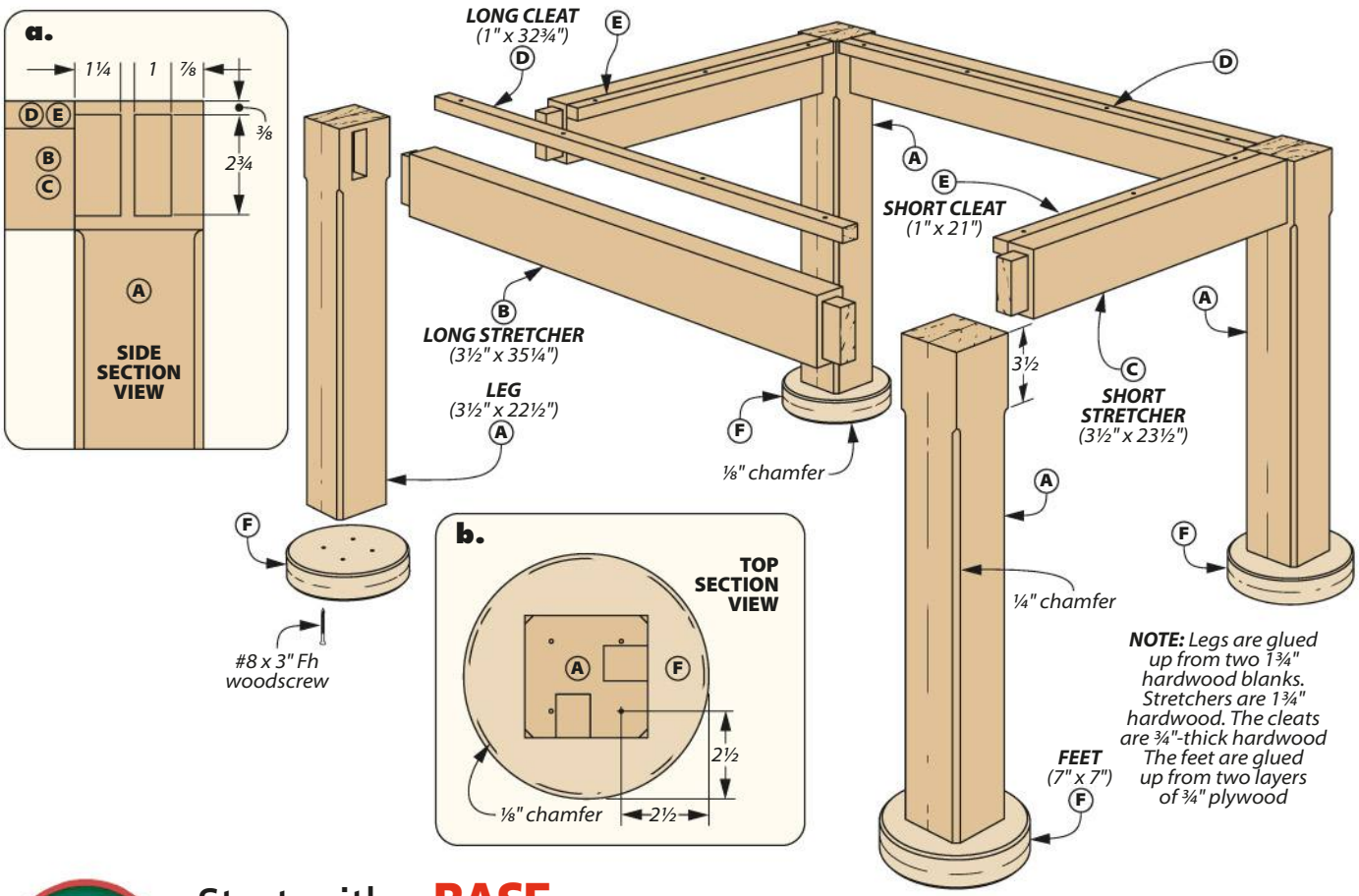

GO 2 Online Extras

Plans for this router table circle jig, are at:

Woodsmith.com/267

Start with a **BASE**

The best place to begin our skittles game is at the bottom. A sturdy hardwood base is what everything will be built on.

LEGS. Each leg is glued up from two hardwood blanks. Size the blanks, then glue them up. After trimming them to size, you can start some joinery. Mortises and tenons join the legs and stretchers, so you'll first need to make the mortises in the legs. I began these by drilling with a Forstner bit, then cleaning and squaring them up with a chisel.

To finish the legs, I routed a stopped chamfer on all four corners. With that finished, it was time for the stretchers.

STRETCHERS. There are four stretchers: a long pair and a short pair. After sizing them, it's time to make the tenons. For these, I set up a dado blade at the table saw and set up a support for the long stretchers.

With the tenons made, the stretchers and legs can be glued up. This will form the frame of the base and give us something to add to going forward.

CLEATS. The cleats provide a connection point for the sub-bottom of the housing, which will be added later. They're glued along the inside of the stretchers, so size them to fit snugly between the legs. Once sized, predrill the mounting holes. Then glue them in place as shown above. These cleats will join the case to the base later on, but there's one more thing to take care of before getting to those pieces.

FEET. The feet are glued up from two pieces of Baltic birch plywood each. Once they were sized, I used a circle cutting jig at the router table to shape the feet (Figure 1). To finish them up, I routed a chamfer around their edges.

The feet are screwed into the bottom of the legs. Flip the base over and center the feet on the legs. I used double-sided tape to stick the feet in place while drilling out the pilot holes, then screwed them in place.

FINDING YOUR FOOTING

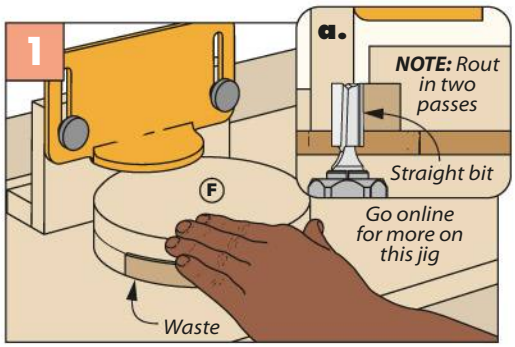

Circle Routing. After cutting the feet to rough shape at the band saw, I achieved the final shape with a straight bit and a circle jig.

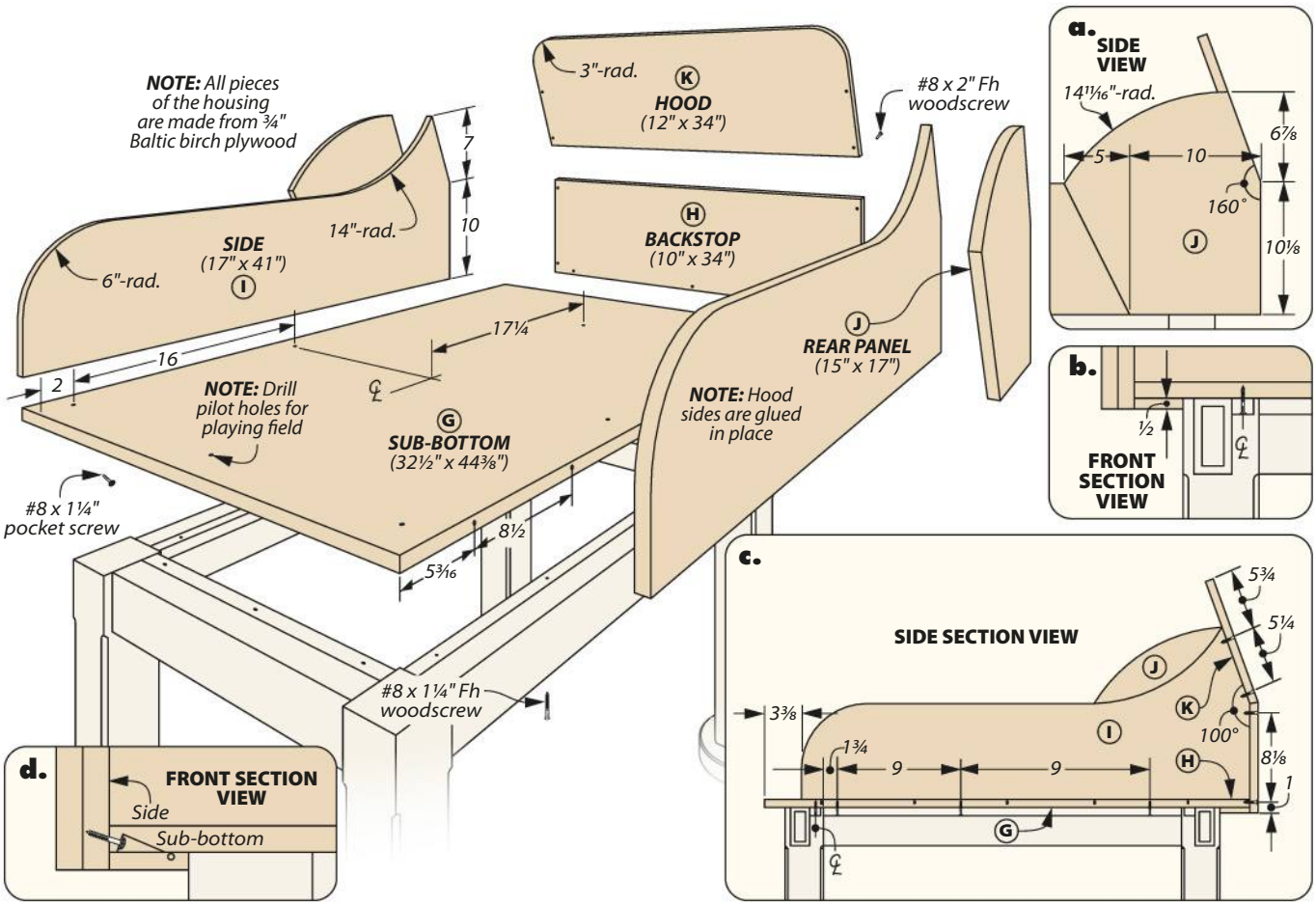

HOUSING

Next on our list is the housing for the playing area. This consists of a sub-bottom, sides, and backstop, in addition to rear panels and a hood piece — which should hopefully catch any errant cheeses.

SUB-BOTTOM & BACKSTOP. I began with the parts that needed the least shaping: the sub-bottom and backstop. After cutting them to size, there's just one bit of business to take care of between the two of them. Bevel rip the upper edge of the backstop, as in detail 'c' above.

SHAPING THE SIDES. The sides define the profile of the skittles game's table. Patterns to help you shape these can be found at *Woodsmith.com/267*.

After sizing the sides, print out the pattern and apply it to one side blank. I first used a jig saw to reach the rough shape, leaving some waste still outside the pattern lines so I could remove the blade marks and refine the shape. From there, I routed and sanded to the pattern. The straight lines were made by clamping a straightedge along the pattern and using it to register my pattern bit while I routed. As for the curves, I simply sanded the shape by eye.

After I had one side shaped, the other was easy. Again, I used a jig saw for the rough shaping, but I then taped the two sides together and used the first as a template for routing the second.

HOOD & REAR PANELS. Along with the sides, the hood provides a catch for any overzealous shots. After sizing, it's corners can be rounded off as shown above.

For the rear panels, I began by laying out the sides, as in detail 'a.' Two clamps and a thin, metal ruler helped scribe the radius.

Shaping the rear panels began at the band saw, rough cutting outside the layout lines. From there, I used a straight edge and a flush trim bit to clean up the straight lines of one panel, and an edge sander to make the final radius. I then used that first panel as a template to rout the second with a flush trim bit.

ASSEMBLY. The housing is mostly assembled with screws. Pocket screws hold together the sides and sub-bottom, while woodscrews are driven in to hold the backstop and hood. The rear panels are simply glued in place Lastly, the case can be mounted by screwing the sub-bottom into the cleats.

As shown on page 26, most of the case was painted white, with the Baltic birch edges exposed. The sub-bottom was painted red to highlight the gutter, and the base was painted black.

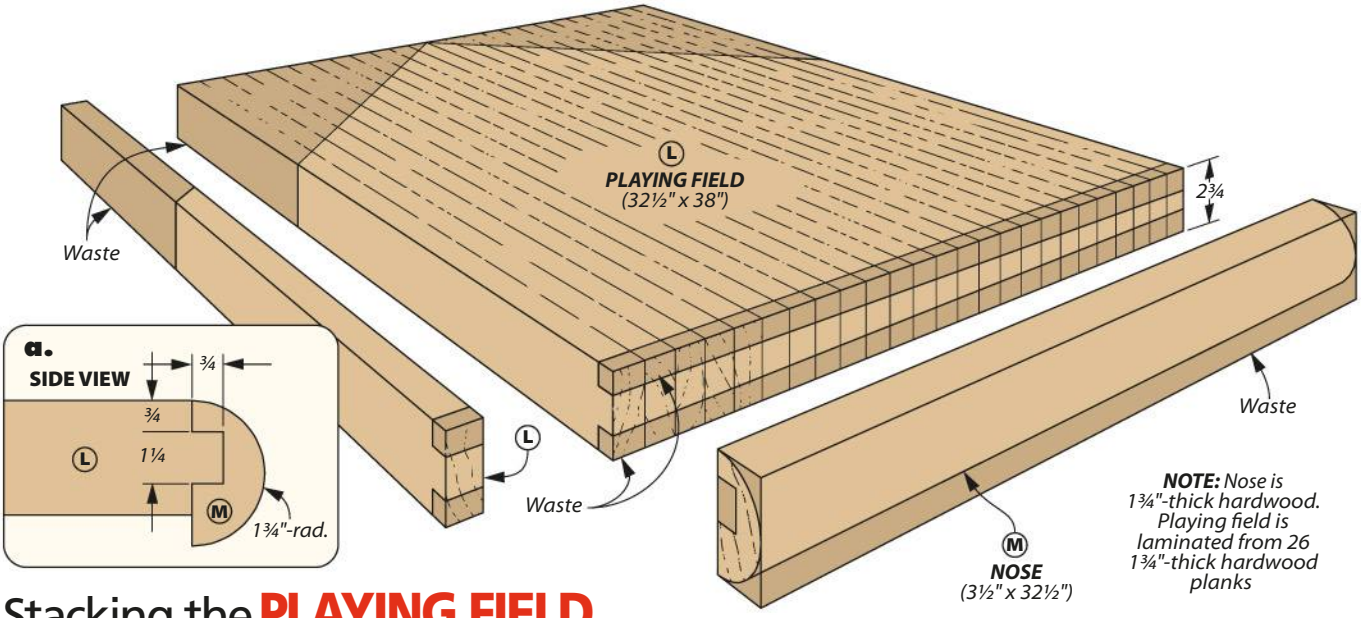

Stacking the PLAYING FIELD

The playing field of the skittles game is meant to take a beating from flying cheeses and scattering pins. As such, it's made like many cutting boards: by laminating strips of hardwood. The field is shaped like a pentagon as well, to provide a "gutter" at the back for the pins to fall into.

LAMINATE STACKS. I started by gluing up four oversized stacks and planing them down once dry. I then glued the four together, planed them, and cut them to fit between the sides of the housing.

SHAPING THE FIELD. Cutting the field to shape was done primarily with a circular saw. Begin by laying out the angled cuts and rabbets on both sides of the field. To make sure the cut was straight, I used a simple guide made from hardboard and a strip of MDF, as in Figure 1.

Chances are with the thickness of the field your saw won't be able to make the full angled cut in one pass. Once you've made both cuts on one side, flip the piece over and finish the cuts.

Next, use the saw to establish the edge of the rabbets (Figure 2). Making these cuts now prevents chipping on the ends when routing. To rout these, I used a router and a short pattern bit, cutting them in two passes.

NOSE

The nose sits at the front of the field. It hangs lower than the field itself, registering against the edge of the sub-bottom.

GROOVE. Before shaping, I first used a dado blade to cut the

GUIDING THE CIRCULAR SAW

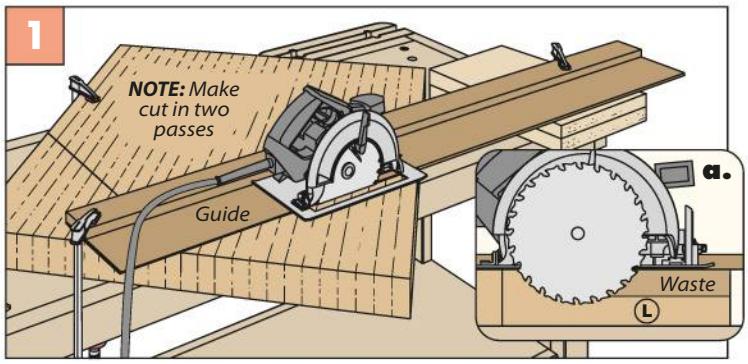

Cutting Corners. To turn this piece into a pentagon, I used a simple guide of MDF and hardboard. The saw's base rides on the hardboard while the base's edge registers against the MDF.

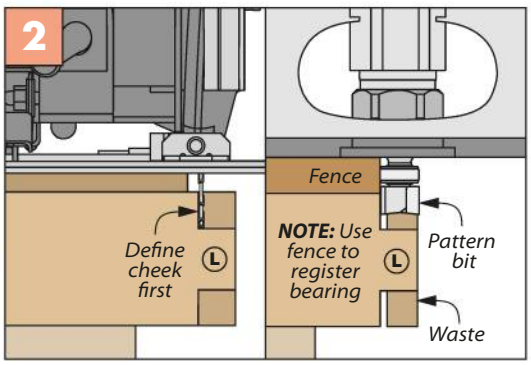

Rout the Tongue. To create the tongue, first establish both cheeks with the circular saw. Then use a pattern bit to rout the waste.

FOLLOW YOUR NOSE

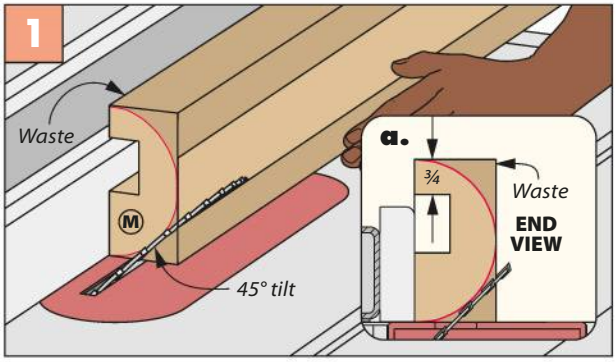

Table Saw Cuts. At the table saw, first cut the offset groove down one side of the nose. Next, tilt the blade and rip a majority of the waste off before shaping.

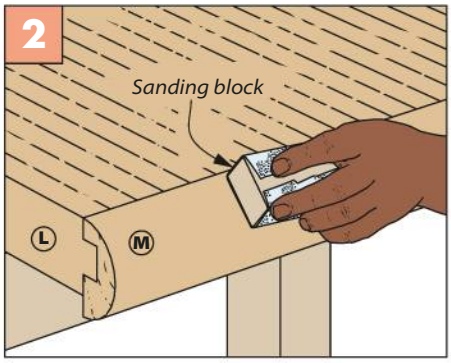

Smoothing the Nose. I started with hand planes to shape and refine the curve, finishing with a sanding block.

groove on the inside of the nose. This is offset from the center and mates with the tongue on the front of the playing field (detail 'a'). Once finished there, I swapped out the dado stack for a ripping blade to begin shaping the rounded side.

SHAPING. The first step is to lay out the shape on either end (detail 'a,' previous page). I tilted the blade to 45° for a bevel rip and cut the nose as in Figure 1 above. The nose will need more shaping, but before getting to that I took advantage of the flat front I had at the moment. I glued the nose to the playing field, then sharpened up my hand planes while waiting for those pieces to dry.

HAND WORK. I used two planes to shape the nose: a jack plane and a smoothing plane. I started with a jack plane to hog off a majority of the waste. The smoother followed after to make a continuous curve over the front. Lastly, I finished up the nose with some sanding.

PIN MARKERS. The last step before we get to the game pieces is to make the pin markers. They're thin sections of dowel glued into the playing field (detail 'a'), and you can see their layout below. I made the holes with a Forstner bit, glued the dowels in, and trimmed them flush.

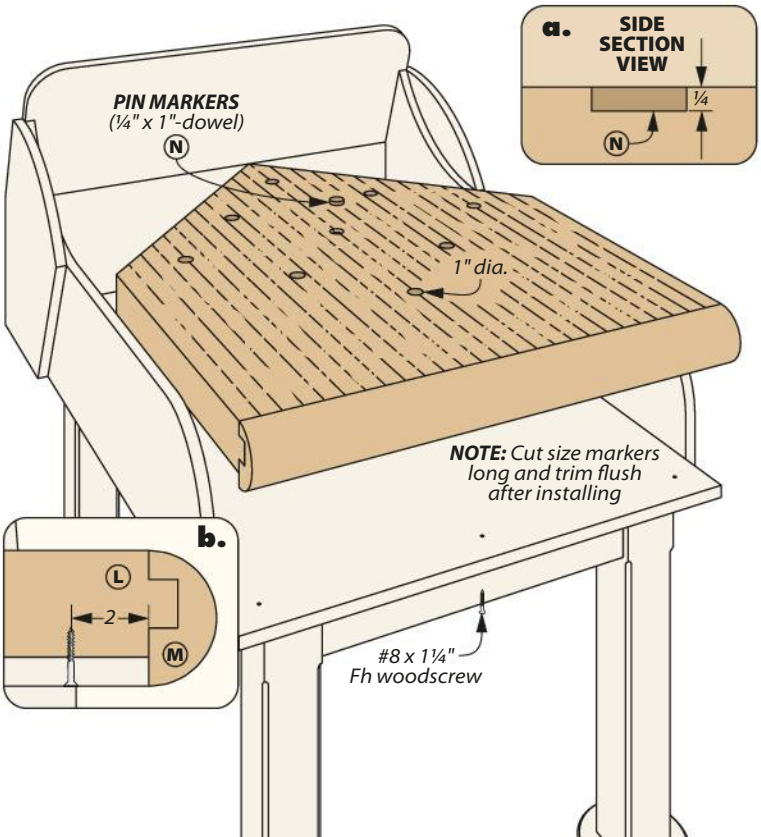

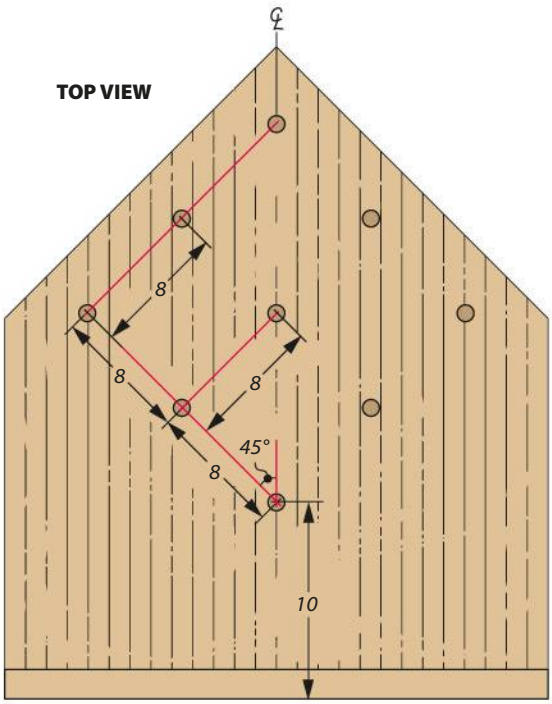

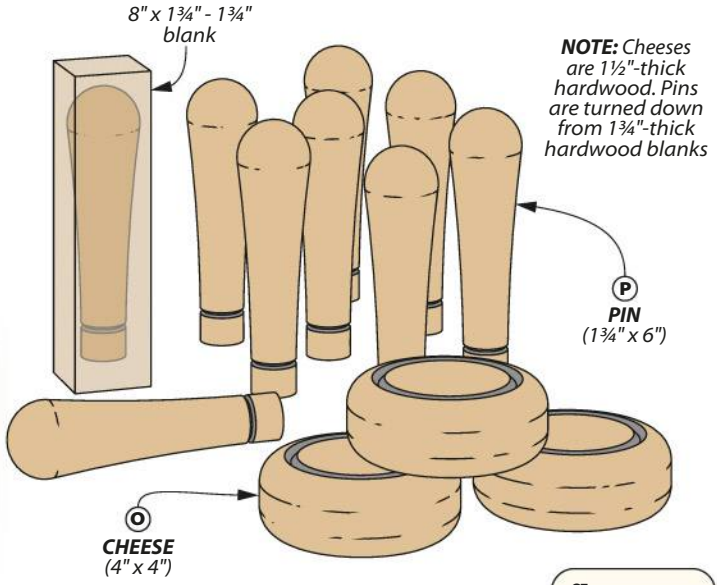

Cheese & SKITTLES

The table may be done, but the game isn't ready yet. The pins and cheeses remain, and they offer a bit of routing and turning to close out this project. Both are made from hardwood, and I began with the three cheeses.

SHAPING THE CHEESES. The first step in making the cheeses, after creating the blanks, is shaping them. Again, I used the circle routing jig at the router table to get the right shape.

GROOVES. Now to swap out the bit. The box below shows what we'll be routing next. The first step will be to cut an L-shaped guide, as you see in Figure 1 below. This can simply be a piece of hardboard. The only important part is one leg of the "L" is set ⅝" away from the bit — this will keep it in a consistent circle as you rout.

Use double-sided tape to stick down the guide, then chuck a V-groove bit into your router table (Figure 1a). Start the router and lower the cheese in place, spinning it to rout the groove. Do this with each cheese.

ROUNDOVER. To close out the cheeses, you'll need to add a roundover to their edges, as shown in Figure 2 below. No guides are needed for this part of the routing. The bearing and bit will do all the work.

PINS

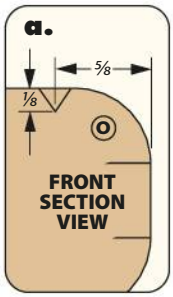

The last part of this project involves a bit of light turning for dessert. There are nine pins in total, and each starts as a hardwood blank. I cut my blanks long so I could chuck the pins to turn them. Four steps are necessary to turn each pin, and while that might sound like a lot, it goes quicker than you think. As a side note, if you're new to turning, consider preparing extra practice blanks to try before diving into the real deal.

SHAPING THE CHEESES

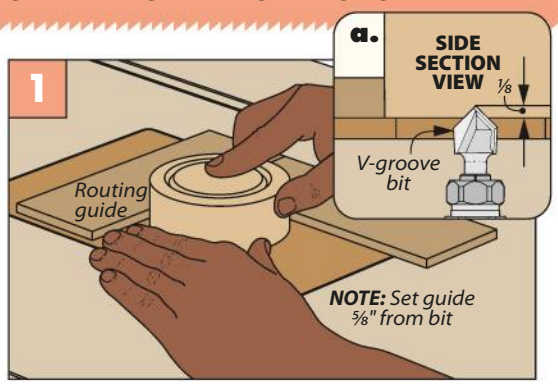

Groove Routing. To rout the V-groove, use an L-shaped piece of hardboard as a guide. This will keep the bit at a consistent distance throughout.

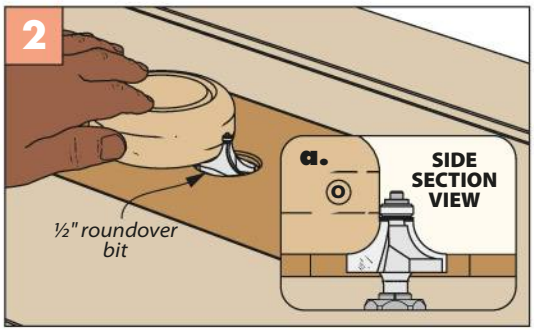

Roundovers. With the groove in place, round over the edges of the cheeses. This is easy at the router table — just let the bearing do the work.

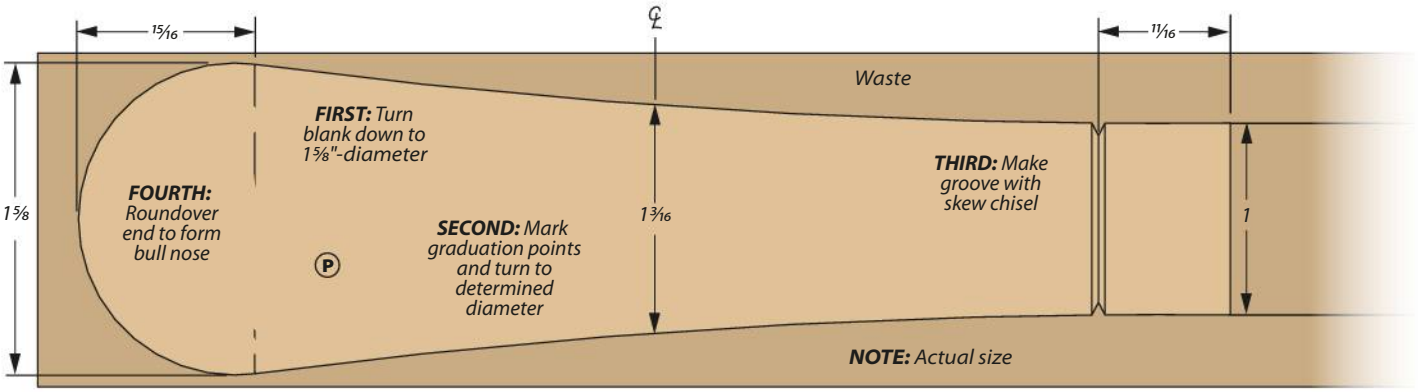

SHAPING. Once I had my blank chucked in, I started with a roughing gouge to turn the blank round. From there I marked out the points of graduation to start the curve: the widest point just shy of the top, the mid-thickness centerpoint, and the narrow bottom and top.

I used a spindle gouge to work "downhill," going from the widest point toward the bottom. Once I reached the right diameter at my centerpoint, I began working the curve out toward the bottom in the same way.

DETAILING. The pin is mostly shaped, but two areas still need addressed: a groove will be made near the bottom, while the top gets rounded off. To make the groove, I first laid it out using a pencil, then used a skew chisel to cut it.

Now to move up top. I went back to a spindle gouge here to shape the steep curve atop the pin. Once I was satisfied with the shape of it, I sanded it while still at the lathe. To free the pin and remove the tenon, I used a parting tool to separate it from the waste. Once the leftover nub was sanded flat, the pin was done.

FINISHING. Only one step remains on our skittles table, and that's the finish. With paint already on, we coated the game — pieces and all — in a few layers of spray lacquer. Unlike most of our projects, this should see some action in its life, so the strength of lacquer is welcome.

To get you started playing, we've included the rules to a variation of hood skittles at *Woodsmith.com/267*. The game is easy to learn, and after tossing a few cheeses you'll have a good handle on it. Now all that's left on the docket is to gather up a few friends, indulge in the libation of your of choice, and enjoy this centuries-old pastime. W

Materials, Supplies & Cutting Diagram

A	Legs (4)	3½ x 3½ - 22½	**H**	Backstop (1)	¾ ply. - 10 x 34	**O**	Cheeses (3)	1½ x 4 - 4
B	Long Stretcher (2)	1¾ x 3½ - 35¼	**I**	Sides (2)	¾ ply. - 17 x 41	**P**	Pins (9)	1⅝ x 1⅝ - 6
C	Short Stretcher (2)	1¾ x 3½ - 23½	**J**	Rear Panels (2)	¾ ply. - 15 x 17			
D	Long Cleats (2)	¾ x 1 - 32¾	**K**	Hood (1)	¾ ply. - 12 x 34	•	(16) #8 x 3" Fh Woodscrews	
E	Short Cleats (2)	¾ x 1 - 21	**L**	Playing Field (1)	2¾ x 32½ - 38	•	(32) #8 x 2" Fh Woodscrews	
F	Feet (4)	1½ ply. - 7 x 7	**M**	Nose (1)	1¾ x 3½ - 32½	•	(10) #8 x 1¼" Pocket Screws	
G	Sub-Bottom (1)	¾ ply. - 32½ x 44⅜	**N**	Pin Markers (9)	¼ x 1"-dowel rod			

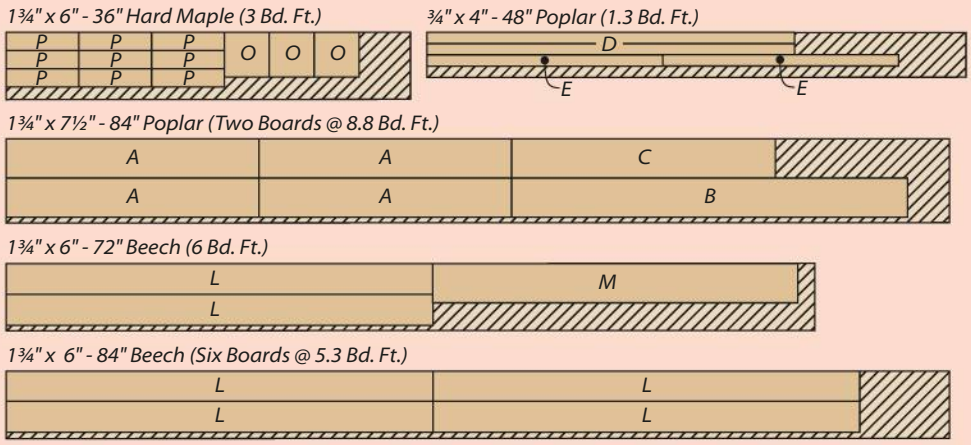

ALSO NEEDED: *One 48" x 96" sheet of Baltic birch plywood*

Written by: Erich Lage; Project Design: John Doyle

Craftsman Chest

White oak, Craftsman design, and a large, handsome family of Woodsmith projects that precede this chest, pretty much make the decision to build it a no-brainer.

George Burns said, "Happiness is having a large, loving, caring, close-knit family in another city." It's hard to argue with that sentiment. But here we're dealing with another kind of family — a family of Craftsman-style furniture. The member of that family shown in the photos here is a chest that resides in the bedroom, often, like you see here at the foot of the bed. But there's no law that says you can't use this good-looking furniture elsewhere in your home.

This chest is the latest addition to our *Woodsmith* line of Craftsman furniture. In issue 219 there's a Gentleman's Dresser, followed up with a bed frame in 235. Then in issue 252 there's a nightstand that's cute as bug's ear. If you leaf through the pages of 258 you'll find a double-treat in a dresser and mirror. So the woodworking DNA that runs through the chest has a strong heritage that it draws upon.

GOOD BONES. For example, frame and panel joinery makes for not only strong case construction, the results of the technique also adorns each side of the chest with a pleasant shadowline. As with the chest's older kin, the project is punctuated with tenon plugs in the sides and top. The top, as you see in the photo to the left, is held open by a pair of torsion hinges that remove the need for a chain or lid stay.

◄ When you open the lid you'll see that the chest is more than a big, beautiful box. Just inside there's a large tray that gives you plenty of storage options.

Illustrations: Dirk Ver Steeg

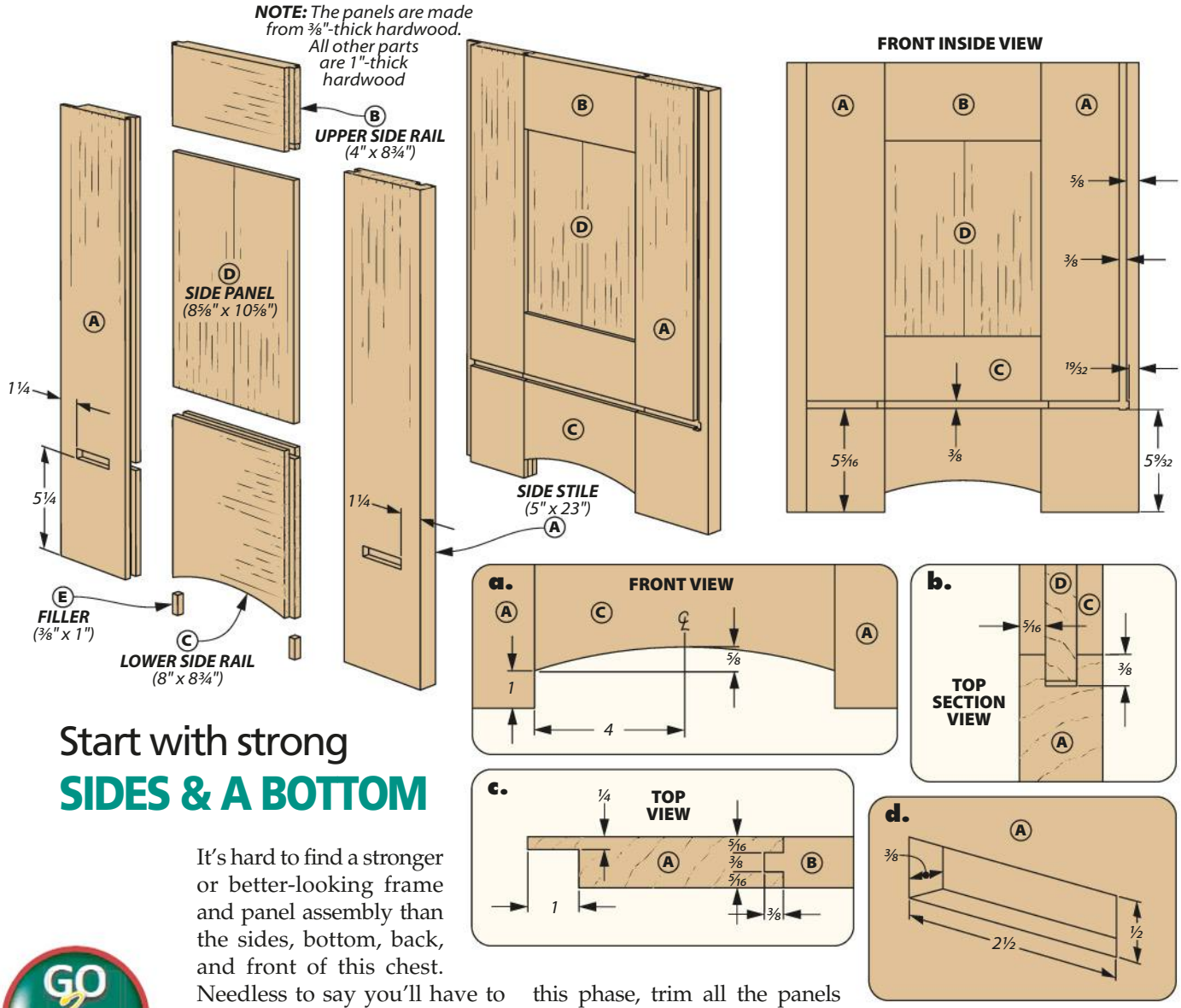

Start with strong SIDES & A BOTTOM

It's hard to find a stronger or better-looking frame and panel assembly than the sides, bottom, back, and front of this chest. Needless to say you'll have to invest some time making these parts, but it's well worth the effort. Let's lead off with the hardwood panels.

MAKING PANELS. Resawing the boards that make up the panels is up first. There's a pile of these to do for other parts of the chest, so relax and spend some time resawing all of the panels at the band saw.

GLUE UP. Gluing up all the panels at this time makes sense as well. Just remember to go easy on the clamp pressure; you don't want to bow the panels. Then bring them to final thickness at the planer. The wide bottom rails will most likely need to be glued up as well. To wrap up this phase, trim all the panels to size, and leave the panels for the sides on the top of the pile, you'll need them shortly. Next you'll cut the stiles and rails that hold the panels to size.

That sets you up to tackle the joinery — tongue and groove. The grooves come first.

GROOVES & TONGUES. Detail 'b' shows the centered grooves on the inside edge of the stiles (and rails); they're done at the table saw. Figure 1 on the next page shows you how to do this. Next you'll set up the table saw to make the tongues that are on the ends of the rails. This step is shown in Figure 2.

Before gluing up the sides, there's some additional work to do on the bottom rail. You need to cut the arc (detail 'a') on the bottom edge. A band saw or your jig saw is the tool of choice for making the arc.

ASSEMBLE THE SIDES. When assembling the sides remember that hardwood panels (and the sides wide rails) have to be able to move with seasonal changes. The easiest way to do this is to apply glue on the upper third of the rails — and just the center of the top and bottom of the panels. While the glue dries on the sides you can make the fillers (main drawing above) that fit in the grooves beneath the lower rails and glue them in place.

GO 2 Online Extras

To learn how to make the stopped mortises and tenon plugs, go to:
Woodsmith.com/267

FRAME & PANEL JOINERY

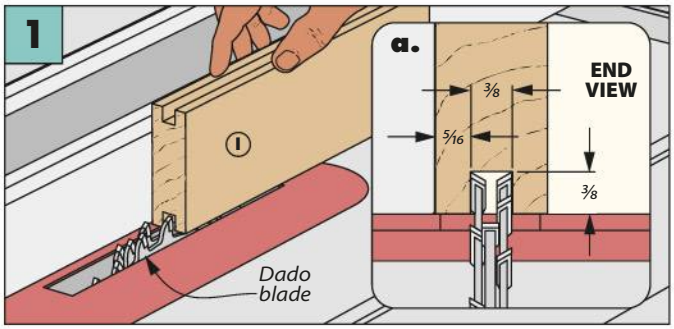

Grooves First. After the first pass over the dado blade, flip the piece end for end to center the groove on the workpiece.

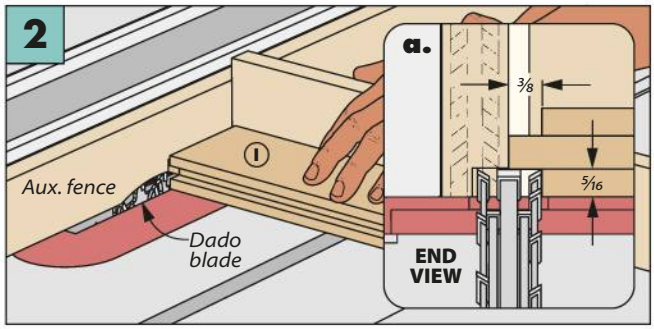

Then Tongues. Cut tongues on the ends of the workpiece with support from an auxiliary miter gauge fence.

DADOES, GROOVES & RABBETS. After clearing away the clamps, you can focus on the joinery that lets you tie the sides to the rest of the chest parts. This starts with the stopped dadoes and grooves that you see in the front inside view shown in the main drawing on the previous page.

The dado across the inside face is for the frame you'll make shortly. The groove that runs up the front edge is for the front frame that you'll make later. You can make both of these at the router table. The challenge is that the bit has starts and stops in the workpiece that are hidden from view. So you'll need to mark the location of the front and back edge of the bit on the fence of the router table. Now that you know where the bit is you also need to know where to stop, so draw layout lines on the face of the sides to guide you while making the cuts. As for making the stopped mortises for the tenon plugs (detail 'd,' previous page), there are directions online at *Woodsmith.com/267*. Lastly cut the rabbet on the rear of the sides to hold the back assembly.

THE BOTTOM

The drawing below gives you all the details needed to make the frame and panel assembly that is the bottom of the chest. The joinery is all the same as the sides, it's the configuration that's a little different.

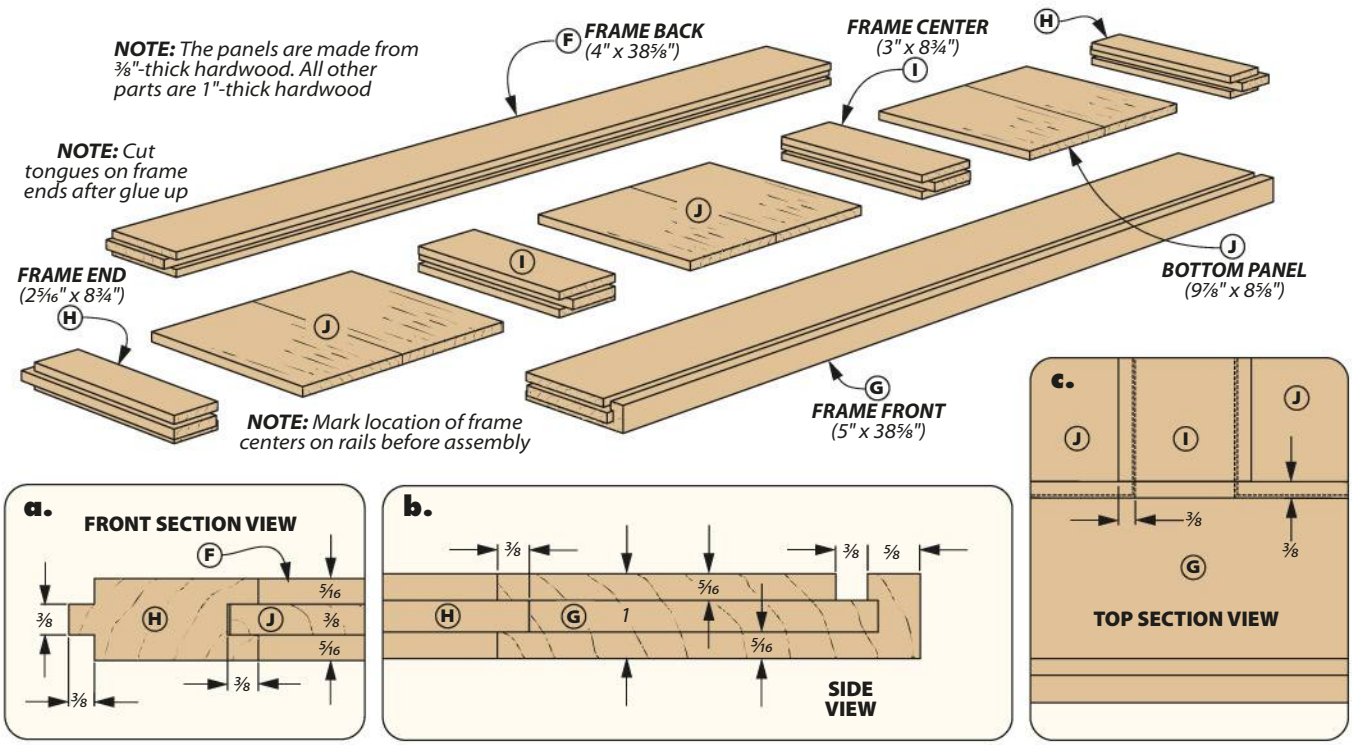

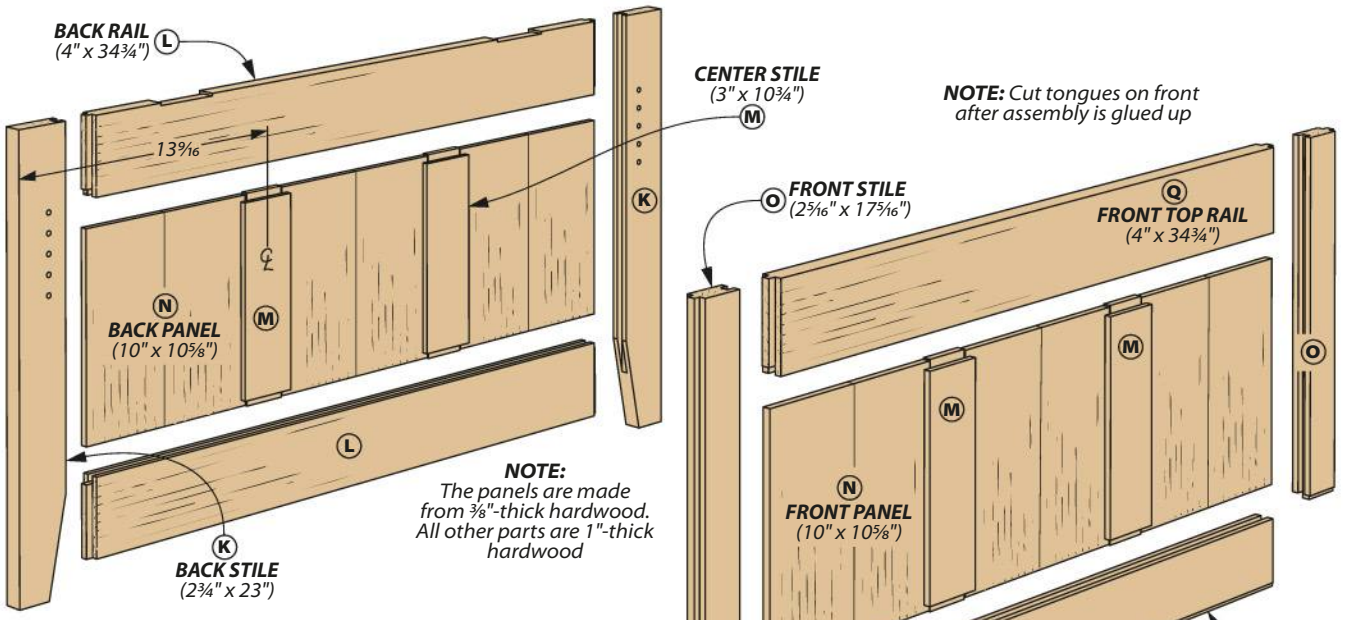

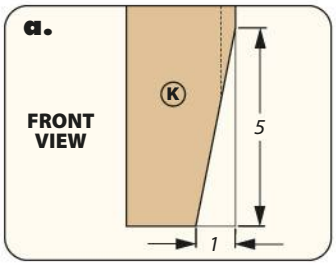

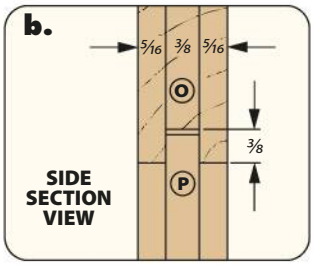

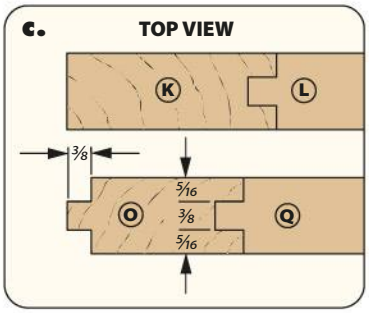

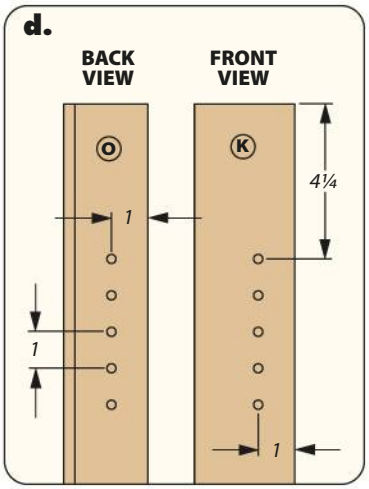

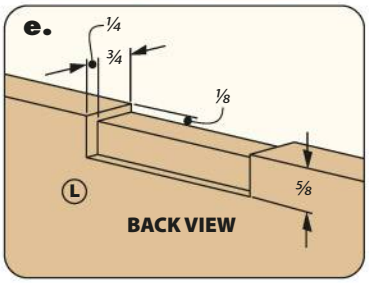

Move on to the **FRONT & BACK**

Building the sides and bottom frame of the chest was a perfect warm-up for working on the larger assemblies that are the front and back of the chest. Let's do a quick review of each before making the sawdust fly.

A PARADE OF PARTS. As you see in the drawings above, both assemblies host three hardwood panels that are all the same size — they're larger than the panels you made for the sides and frame. The center stiles function in the same manner as frame centers you made for the bottom by adding good looks to the chest and rigidity to each assembly. Connecting these parts above and below are the rails. Note that the rails on the back are the same size, but the lower rail on the front is narrower to allow for the joinery along the front edge of the bottom. Once assembled, it will "look" like a 4" wide rail like the top. Also the bottom rail has a tongue that joins it to the bottom frame. Notice in detail 'a' that there's a short taper on the back stiles.

If you didn't make them earlier you can get after the panels now. Then cut to size the all the pieces I just described. But before diving into the joinery, you'll need to head over to the drill press and drill the holes for the shelf pins in the front and back stiles that will support the tray that you'll make later (detail 'd' shows this).

JOINERY. The joinery that's shown in details 'b' and 'c' on

the previous page are what's on the menu — yep, it's more of the tongue and groove joinery you cut earlier. No whining though, there are starving woodworkers across the land that would love to have this on their plates.

Focus first on the centered grooves in the stiles (and rails), before turning you attention to the tongues on the rails. I didn't mention it before but be wise and make a test tongue on a scrap board so you can dial in on a perfect fit. Good boy.

MORTISES. One more thing. There are two mortises you need to make in the top back rail to accommodate the hinge (and its knuckle) for the top (detail 'e,' previous page). You could do this later, if you like — dealer's choice. Before you glue up the parts you'll need to mark centerlines on the rails and center stiles to keep them evenly spaced across the rails. Now you can glue up the front and back of the chest.

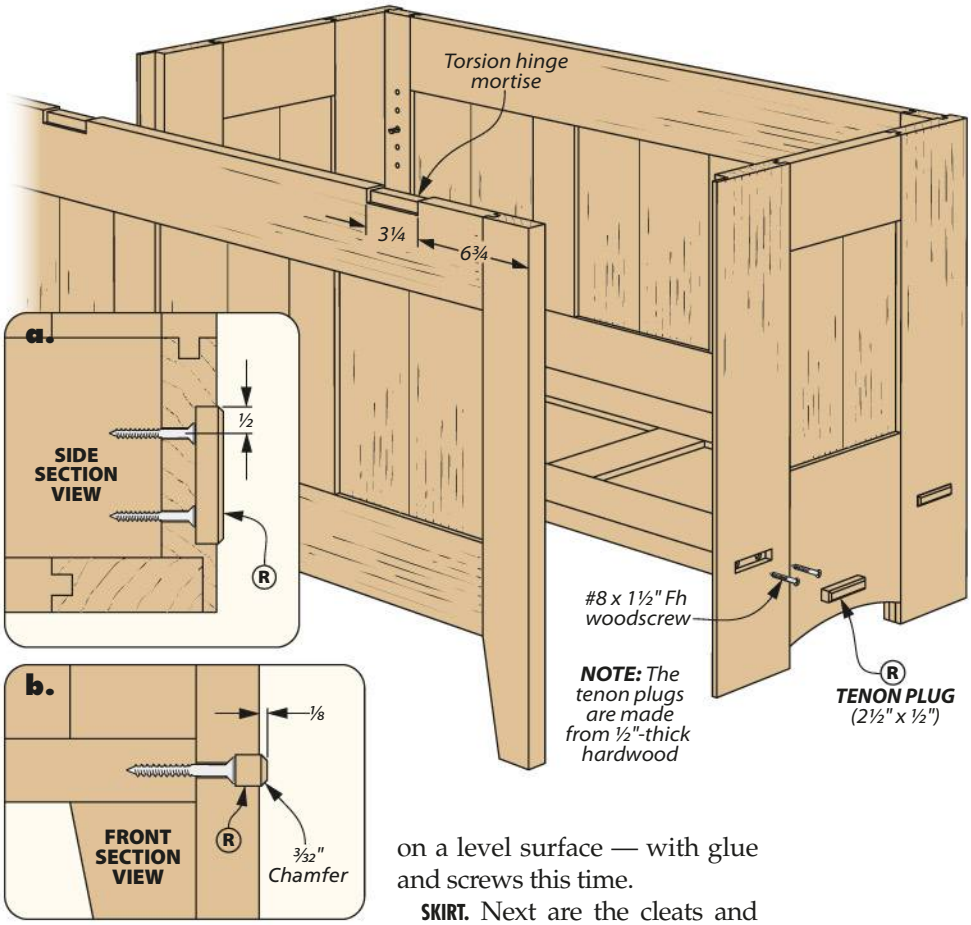

ASSEMBLE THE CASE

A dry-run of assembling the case part is in order for several reasons. First, it gives you a chance to iron out any kinks that might exist between the sub-assemblies. Second, you can drill the pilot holes for the screws in the mortises that hold the tenon plugs (details 'a' and 'b'). There are directions online at *Woodsmith.com/267* that show you how to safely make the small plugs. The screws also make it a lot easier to assemble the case. So haul out the clamps, pre-gap them and put the parts together on a level surface — with glue and screws this time.

SKIRT. Next are the cleats and the skirt that you see in the drawings below. The cleats are glued to the sides underneath the bottom and the sides (detail 'a'). They're recessed slightly so the skirt will match the reveal of the front, Which will also extend the shadowline to the bottom of the chest (detail 'b'). Now it's time to make the tray and top.

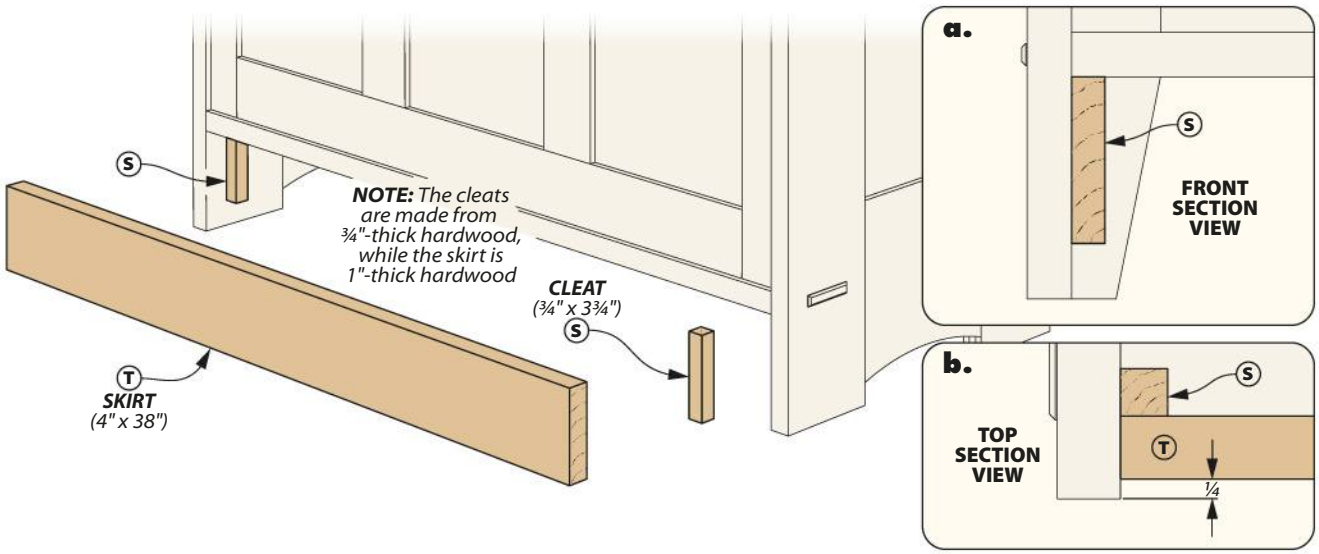

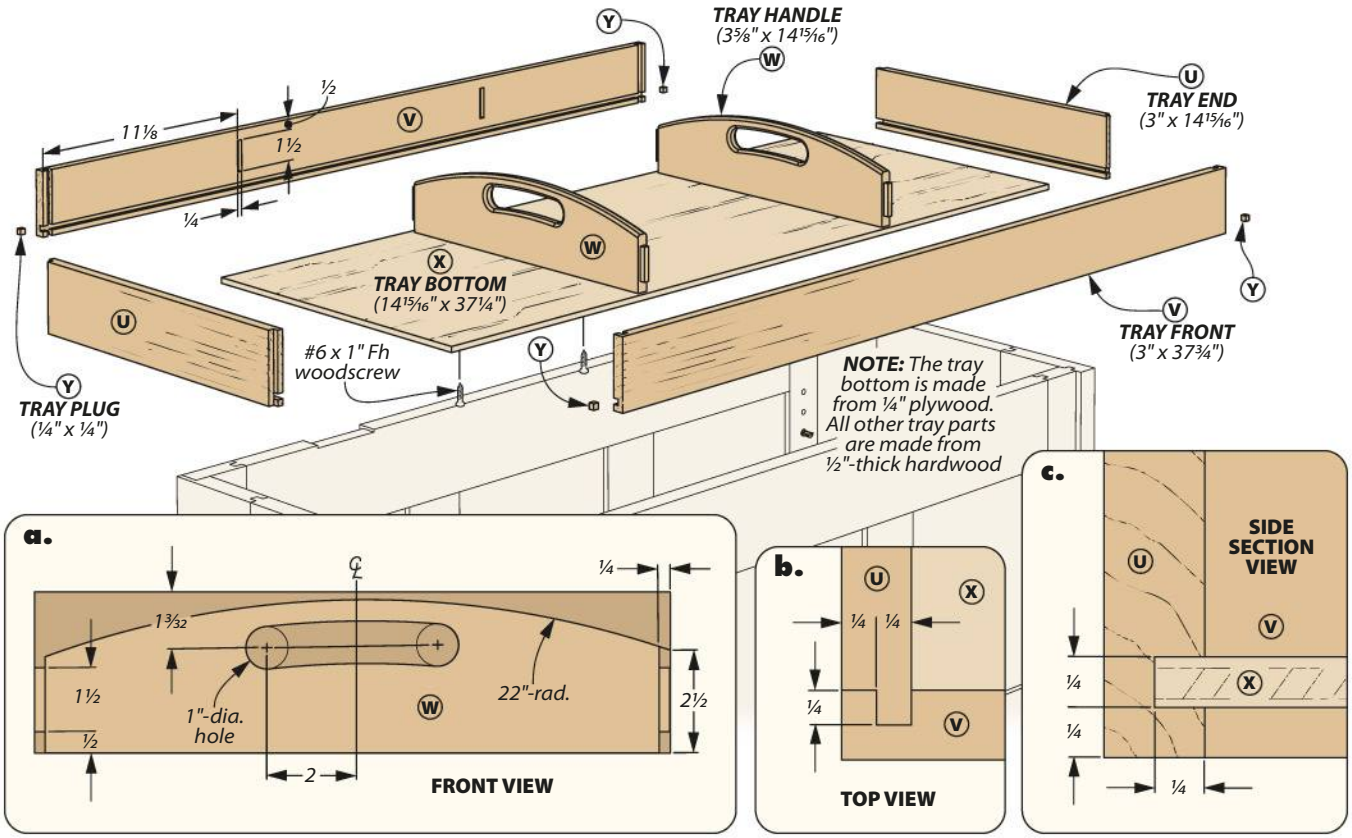

Coasting on to the TRAY & TOP

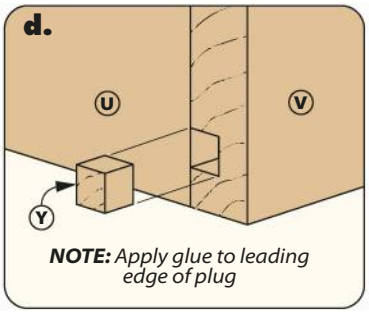

The tray you see above enhances the storage options of the chest. While the design of the tray is borrowed from a chest that was built by Stickley, we've made a couple of simple updates.

First, the bottom of our tray is made of plywood instead of the traditional cedar slats. Second, I ditched the wood stops that supported the tray in the original, and used shelf pins instead, allowing you to adjust the position of the tray in the chest. Otherwise, the joinery that's used here — tongue and dado — has stood the test of time.

TONGUE & DADO. This joinery technique, combined with thin hardwood makes it easy to lift the tray in and out of the chest. It's the same combo that's often used with drawers.

Start at the table saw by making the dadoes on the ends of the front and back pieces (detail 'b'). The same setup, using the rip fence instead of your miter gauge, positions the grooves along the lower edge of the front, back, and ends for the plywood bottom (detail 'c'). Next, cut the rabbet on the ends of the tray sides (detail 'b').

MORTISES. To attach the handles to the tray you need to cut mortises in the front and back to accept the tenons cut later on the ends of the handles (detail 'a'). Once you have the mortises laid out on the workpieces you can use a plunge router guided by a straightedge to cut the mortises. Squaring the corners with a chisel completes this task. Now you can make the handles.

TWO HANDLES. The handles are the business end of the tray that are designed for strength and comfort. The arc at the top of the handles (detail 'a') isn't just for looks. The taller profile lets you raise the handle opening away from the bottom of the tray for easy access.

The first thing to do (after cutting the blanks to final size) is cut the tenons on the ends of the blanks. Then you'll spend some time laying out the arc and the handle location on the blanks. From there it's just a matter of cutting out the rough shape of the arc at the band saw (stay on the waste side of the line) then sand it smooth.

GET A GRIP. As for the handle opening, start by defining the ends with a Forstner bit in your drill press. The rest of the waste can be removed with a jig saw. After sanding the edges smooth, round them over as shown in

the main drawing on the previous page. The last thing to do before gluing up the tray is cut the plywood bottom to size.

The first thing to do after removing the clamps is install the plugs in the hole left by the grooves in the front and back (detail 'd' previous page).

THE TOP

I'm assuming that you saved the best-looking boards for the top of the chest — maybe some wood that you stowed away for just such an occasion? Either way, it's time to glue them up. I usually rip all the boards to final width but leave them a little long, then trim the ends nice and square.

Once you've eased the edges, you can rout the mortises (detail 'a') with the same jig you used on the sides of the chest. Then all that's left to do is glue the plugs in place (detail 'b'). The hinges for the chest are torsion hinges.

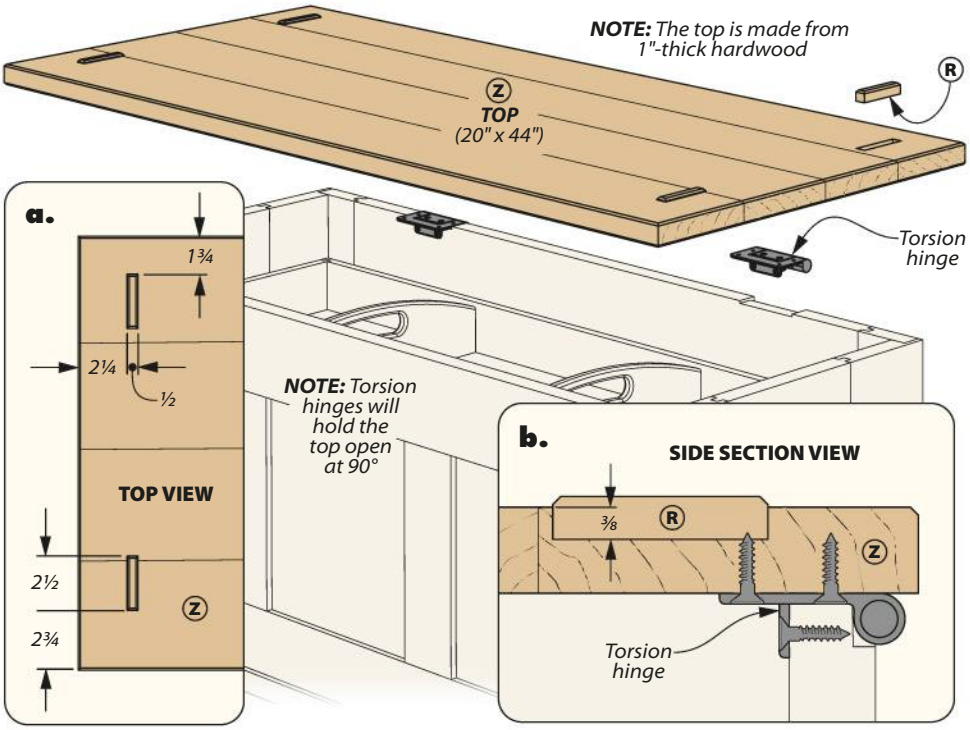

This clever hardware will hold the top open once it's close to 90°. With the hardware installed, all that's left to do is stain and topcoat this beauty. Once the finish is dry, you'll need to call upon a friend to move the chest to its new home. W

Materials, Supplies & Cutting Diagram

A	Side Stiles (4)	1 x 5 - 23	J	Bottom Panels (3)	⅜ x 9⅞ - 8⅝	S	Cleats (2)	¾ x ¾ - 3¾
B	Upper Side Rails (2)	1 x 4 - 8¾	K	Back Stiles (2)	1 x 2¾ - 23	T	Skirt (1)	1 x 4 - 38
C	Lower Side Rails (2)	1 x 8 - 8¾	L	Back Rails (2)	1 x 4 - 34¾	U	Tray Ends (2)	½ x 3 - 14 15/16
D	Side Panels (2)	⅜ x 8⅝ - 10⅝	M	Center Stiles (4)	1 x 3 - 10¾	V	Tray Front/Back (2)	½ x 3 - 37¾
E	Fillers (4)	⅜ - ⅜ x 1	N	Front/Back Panels (6)	⅜ x 10 - 10⅝	W	Tray Handles (2)	½ x 3⅝ - 14 15/16
F	Frame Back (1)	1 x 4 - 38⅝	O	Front Stiles (2)	1 x 2 5/16 - 17 5/16	X	Tray Bottom (1)	¼ ply. x 14 15/16 - 37¼
G	Frame Front (1)	1 x 5 - 38⅝	P	Front Bottom Rail (1)	1 x 3 5/16 - 34¾	Y	Tray Plugs (4)	¼ x ¼ - ¼
H	Frame Ends (2)	1 x 2 5/16 - 8¾	Q	Front Top Rail (1)	1 x 4 - 34¾	Z	Top (1)	1 x 20 - 44
I	Frame Centers (2)	1 x 3 - 8¾	R	Tenon Plugs (8)	½ x 2½ - ½			

- (8) #8 x 1½" Fh Woodscrews
- (4) #6 x 1" Fh Woodscrews
- (1 pr.) Torsion Hinges w/screws
- (4) ¼" Shelf Pins

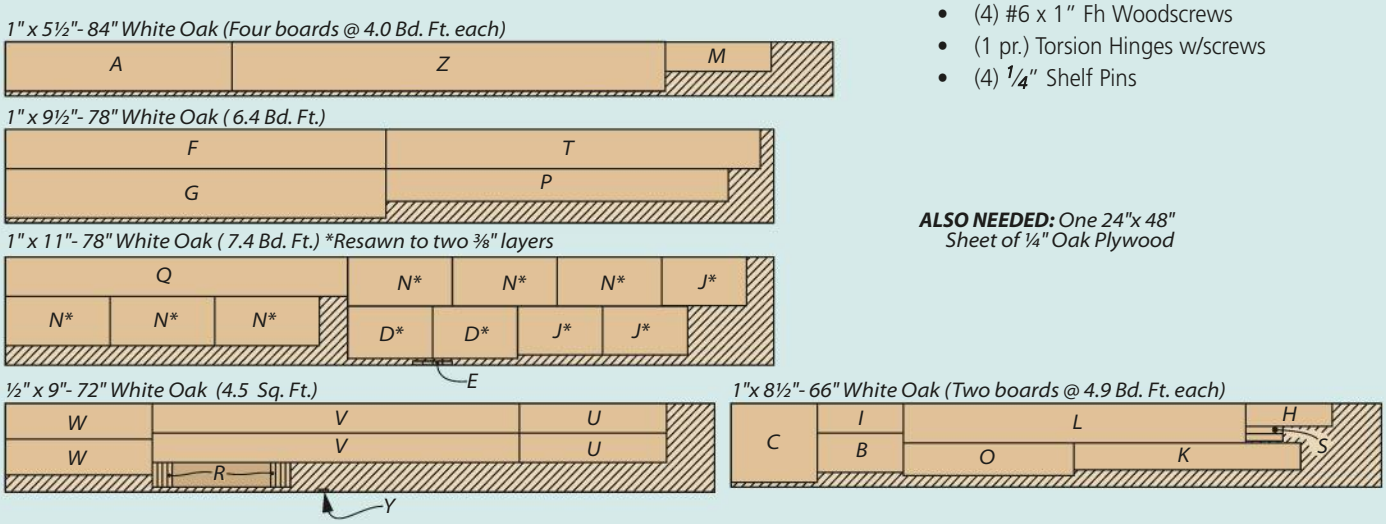

ALSO NEEDED: *One 24"x 48" Sheet of ¼" Oak Plywood*

Written by: Erich Lage; Project Design: Chris Fitch

Arts & Crafts Side Table

Don't let the compact size of this project fool you. There's fun work to do with curves, and some challenging angles and bevels to boot.

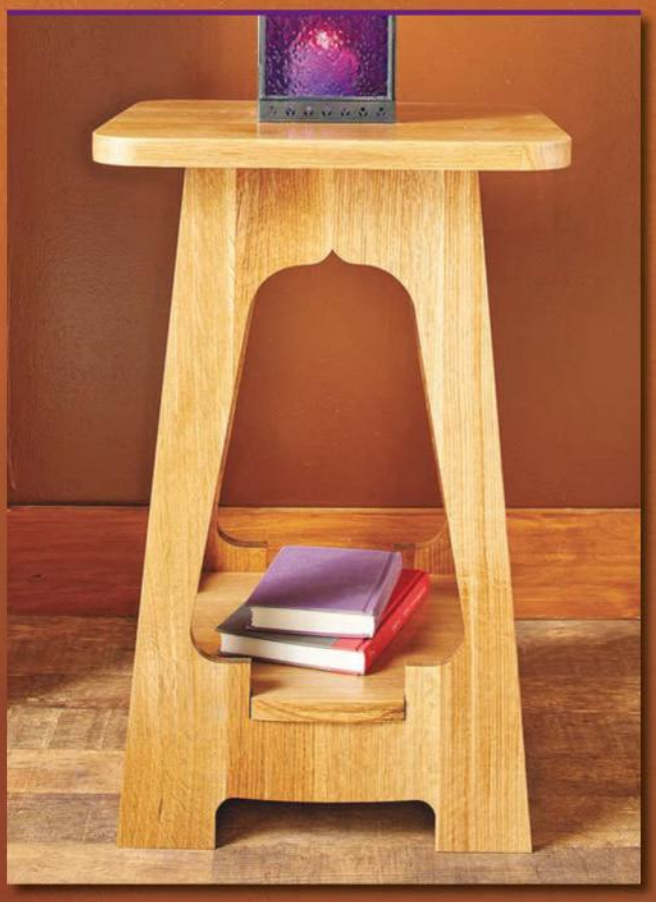

▲ Geometric cutouts on angled plank surfaces are a few of the hallmarks of this member of the Arts & Crafts movement. Light loves to play on these simple, yet elegant surfaces.

▲ The subtly curved edges of the shelf are nestled in the base of the opening. The edges also overhang the sides slightly to toss a little more interest into the project.

Illustrations: Dirk Ver Steeg

One of the lesser known players of the Arts & Crafts movement was a humble chap named Charles Limbert. He began his journey as a furniture salesman, later building furniture companies of his own under the moniker *Charles P. Limbert*, in Grand Rapids and later in Holland, Michigan. Both factories were well staffed and known for their efficiency and creativity. Not only was his furniture found in many American homes, the company contributed quality product as diverse as lavatory stands and sinks to the majestic lodge *Old Faithful Inn* located in Yellowstone national park

Mr. Limbert's style was an amalgamation of the austere work of Gustav Stickley, the graphic hauntings of Charles Rennie Mackintosh, and a pinch of Dutch Arts & Crafts. The side table that's featured here winks to all of those contributing factors.

SOLID & STYLISH. The sides starts as slabs of oak that taper from bottom to top to lighten the visual profile of the piece. They're beveled on the ends and joined to each other with splines. This technique adds a surprising amount of strength and stability to such a small piece. The 1"-thick top crowns the table with a little extra beef. I think it's time to hit the shop.

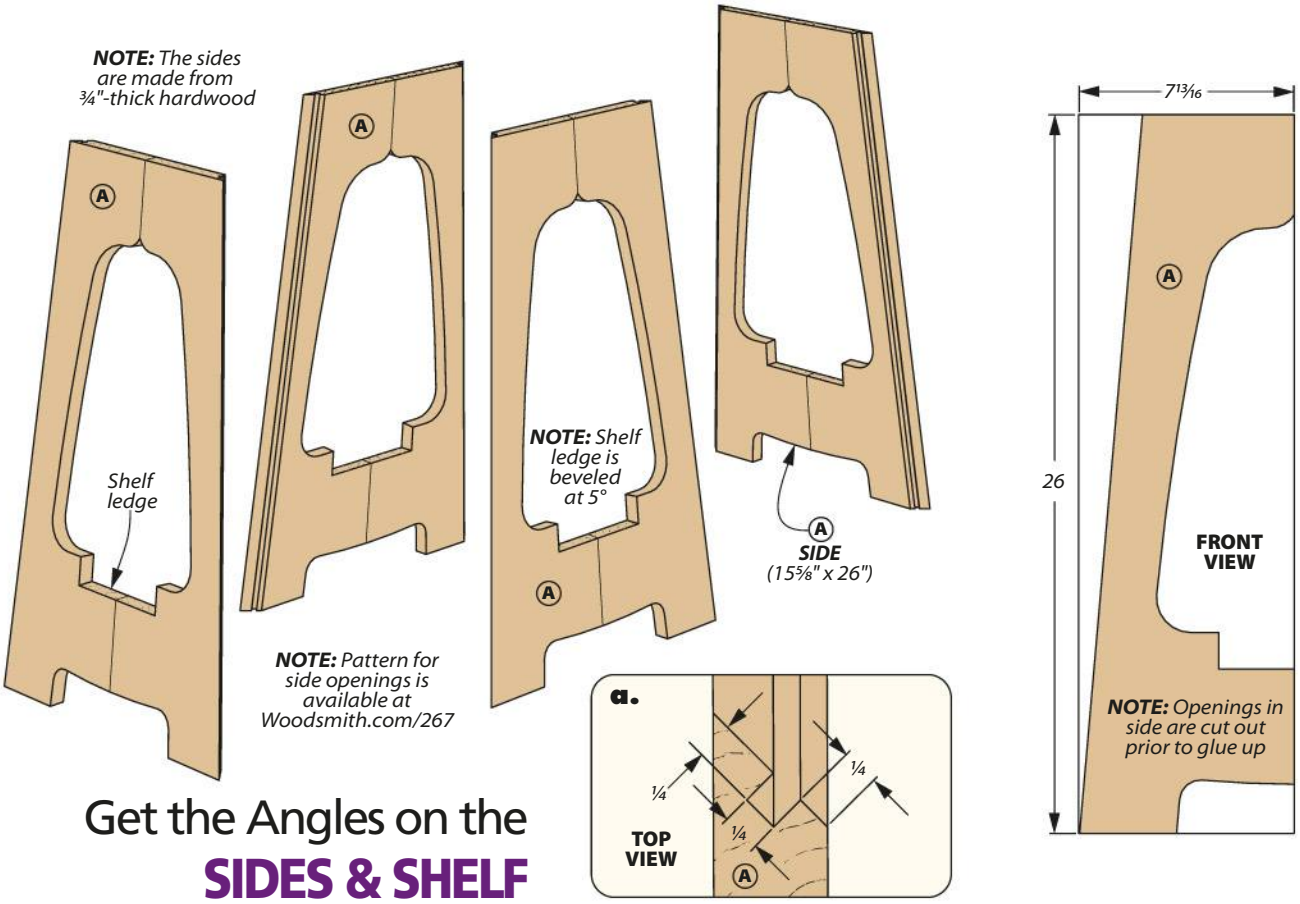

Get the Angles on the SIDES & SHELF

The pattern and profile of the sides of the table look simple enough, but there are a few devilish details (bevels, tapers, and angles) to contend with along the way when making the parts. Let's start with the blanks.

ANATOMY OF THE SIDES. Each side consists of two halves with a mirrored pattern cut into the opening — the front view detail above shows this. The full-size pattern for the sides is available online at *Woodsmith.com/267*. To keep things uniform, I used the pattern to make a template.

Next up you need to cut the eight blanks to their overall size and trace the profile of the pattern on each blank. Then it's time to cut the bevels on the ends, that operation is shown in Figure 1 below. The cut across the top and bottom are straightforward. But as you see in the main drawing, the ledge that the shelf sits on is beveled as well. That section is harder to reach with the table saw. I cut the beveled ledges of each half at the band saw to the

PROPER BEVELS & GROOVES

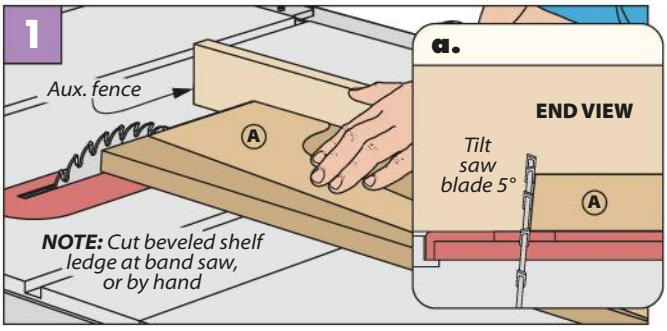

Bevel the Ends. The top and bottom edges of each side piece need a bevel cut. The shelf edges are cut by hand.

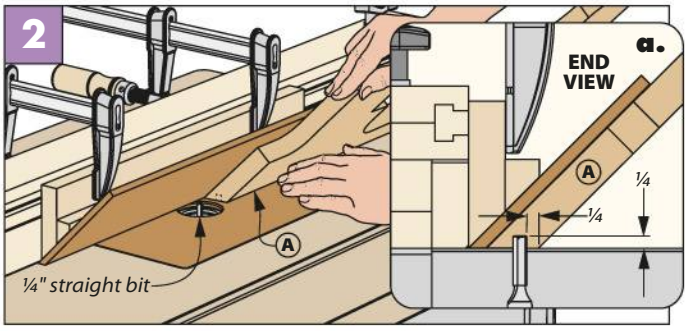

Slot for Splines. A jig guides the workpiece while you cut the through slots in the beveled edges of the sides.

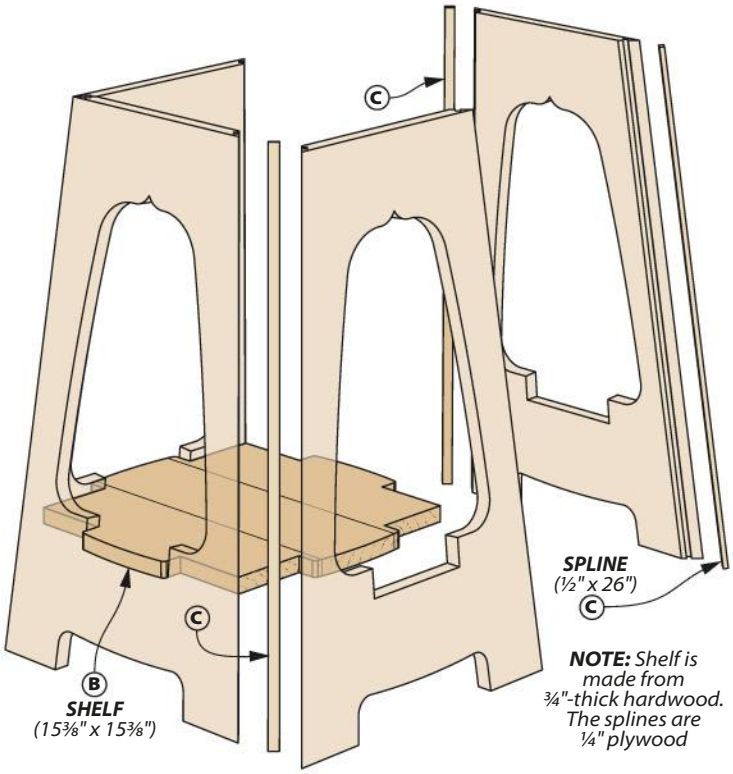

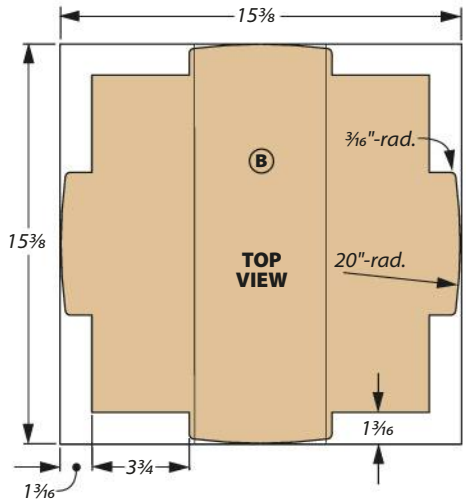

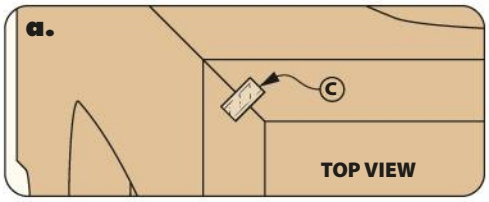

waste side of the line and then sanded the surface smooth. You could do this step with a hand saw also.

FINISH THE OPENING. Roughing out the rest of the pattern in the sides is done with a jig saw on the waste side of the line. Then you can attach the template to the side and smooth most of the profile with a pattern bit in your router. You'll have to use hand tools for the tight spots. Gluing up the halves is next. Align the top edges and sand out any issues along the shelf edges.

TAPER JIGS. Also online there are two jigs to cut the tapers and bevels needed for the sides. The first jig cradles the square edge of the sides while cutting the beveled taper on the opposite side. The second jig positions the side piece to dress the other edge of the side.

GROOVES. Use your router table and a ¼" straight bit to rout the grooves in the bevels (Figure 2, previous page). Before we can assemble the sides we have to make the bottom shelf that's trapped between the sides.

THE SHELF

The shelf features tongues that rest on the shelf ledges in the sides. The Top View, drawing above, shows the dimensions of the shelf. To create the tongues, stand the shelf on edge and cut notches with a dado blade (Figure 1) below. The soft arc on the front edge of the tongues can be shaped at the band saw. Then sand all edges smooth.

The splines are made from ¼" Baltic birch plywood I had left over from another project. If you want to use hardwood splines it's best to make them from lengths of crossgrain pieces. Don't forget to do a dry run clamp up to ensure everything fits.

GLUE UP. I used epoxy here because of strength and open time. Starting with the splines, coat them and slide each one in its groove. Rest the shelf on the ledges of the sides and band clamp the sides together.

SHAPING THE SHELF

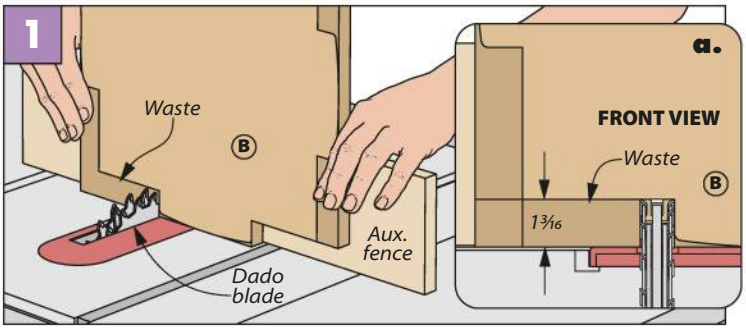

Notch the Shelf. Support the shelf with an auxiliary fence attached to your miter gauge while cutting the tongues on each side.

GO 2 Online Extras

For full-sized patterns and taper jigs how-to for this project, go to:

Woodsmith.com/267

Bring it Together with CLEATS & THE TOP

There's not a whole lot left to build to finish up this gem of a project. First you'll need to manufacture the cleats you see in the main drawing to the right. The cleats are prologue to the last piece of the side table — the top.

CLEATS. The cleats are hardwood strips screwed to the four sides of the table base. Detail 'a' shows the position of the long cleats that fasten the shelf to the base. Detail 'b' shows the short cleats that are used to tie the top to the base.

The profile of both cleats are the same. Making them starts by ripping strips that are ¾" square, but there's a little more to do to make the cleats fit. You'll need to take into account the tapered sides of the base so the top of the cleats are flush in their openings.

Figure 1a below shows the angle you need to set on your table saw blade to make this bevel cut. You can cut the strips to final length before the bevel, like you see in Figure 1, or leave the cleats in one long strip and cut them free after making the bevel. Beveling the cleats in smaller pieces will give you greater control over the operation — either way, for safety's sake you'll need to use a push block while feeding the workpiece through the saw.

SHANK HOLES. The main drawing above shows the location

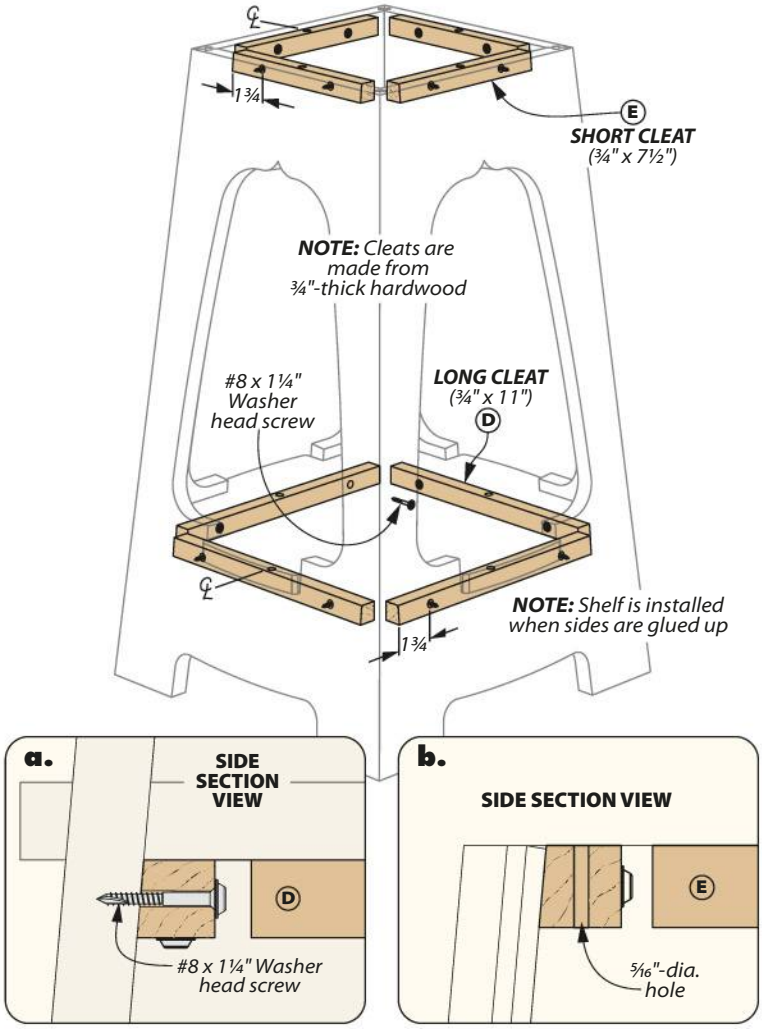

ANGLE & ASSEMBLY

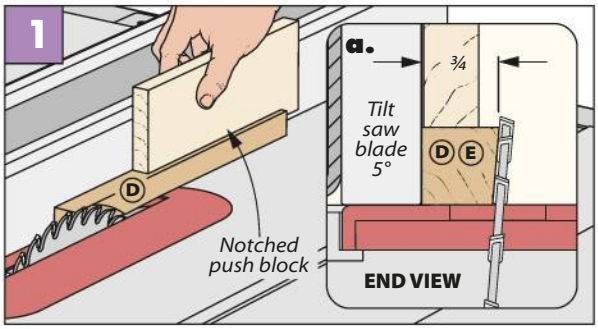

Beveled Cleats. You'll need to use a push block when cutting the bevels on the cleats at the table saw.

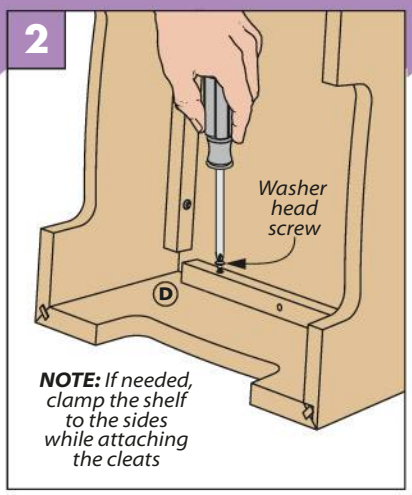

Attach the Cleats. First drill the shank holes in the cleats for all of the screws. Then position cleats on the inside of the table base and mark the location of the pilot holes in the sides and shelf. Drill the pilot holes for the sides and screw the cleats in place. Repeat the process for the shelf.

and size of the shank holes in both sets of cleats. The holes are oversized slightly to allow for seasonal wood movement. Figure 2 on the previous page shows the process of drilling pilot holes and screwing the cleats to the sides.

SCREWS. You'll also notice that we've employed washer head screws instead of flat head screws. These screws, with their built-in washers, are ideal for enforcing the "bend but don't break" policy of allowing wood to move when needed.

THE TOP

You'll notice in the main drawing to the right that the top is 1"-thick hardwood. You could just as easily stick with ¾" material for the top and it would look okay. But we want more than just okay. Simple counterpoints such as the thicker top is one of the hallmarks of Arts & Crafts furniture design.

Hear me out: if you take a gander at the photos of the side table at the beginning of the article, look how the light catches the sides and shelf, while the tapered sides draw your eye upwards to the top. I contend that the slightly thicker mass of the 1" (detail 'b') top gives you pause long enough that you look at the whole profile over again. It's a theory. After you glue up the pieces, cut the blank to its final size.

SOFT CORNERS. Detail 'a' shows the information needed to round the corners. After removing the waste in the corners, sand them smooth and kiss the edges with sandpaper. Then center the top and screw it to the cleats. I think you'll agree that building this gem was a fun woodworking workout that was quite satisfying. W

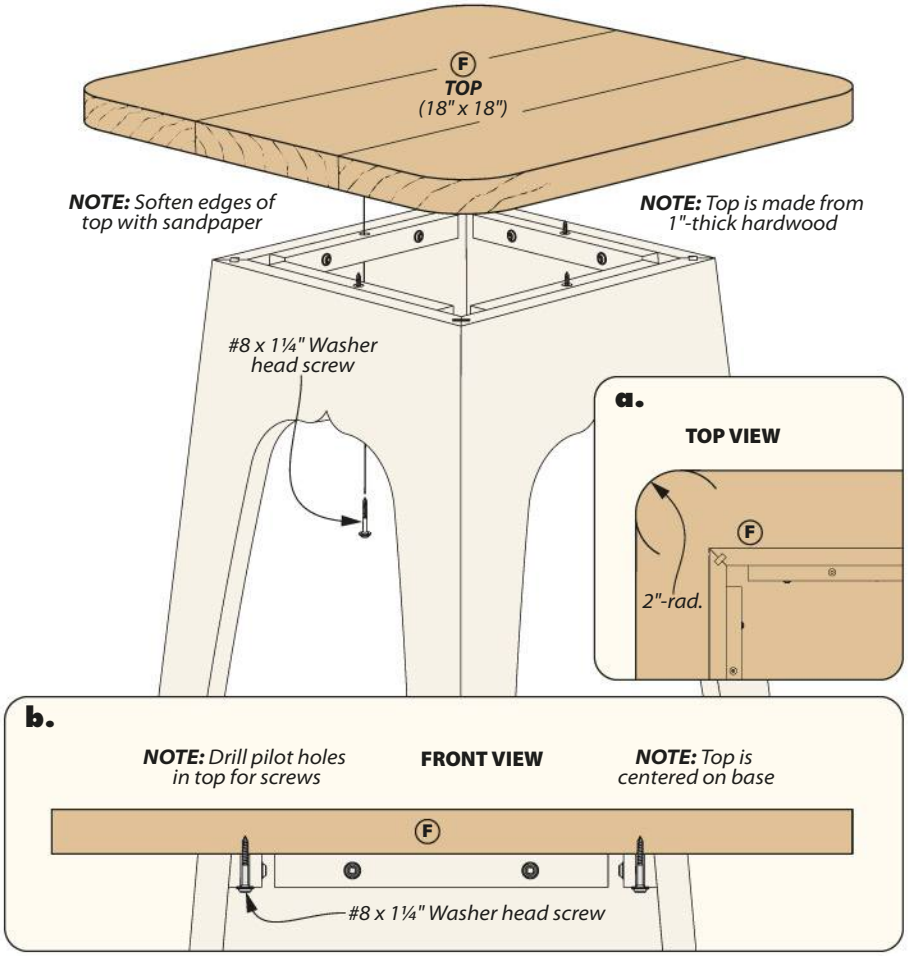

Materials, Supplies & Cutting Diagram

A	Sides (4)	¾ x 15 9/16 - 26	**D**	Long Cleats (4)	¾ x ¾ - 11	•	(24) #8 x 1¼" Washer head screws
B	Shelf (1)	¾ x 15⅜ - 15⅜	**E**	Short Cleats (4)	¾ x ¾ - 7½		
C	Splines (4)	¼ ply - ½ x 26	**F**	Top (1)	1 - 18 x 18		

¾" x 8"- 108" White Oak (Two Boards @ 6.0 Bd. Ft. Each)

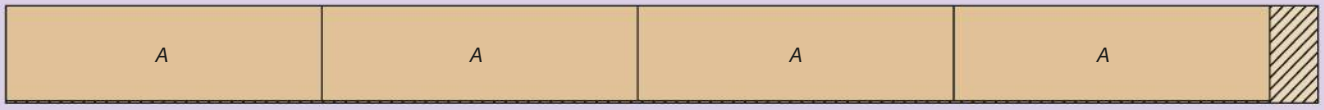

¾" x 6½"- 66" White Oak (3.0 Bd. Ft.)

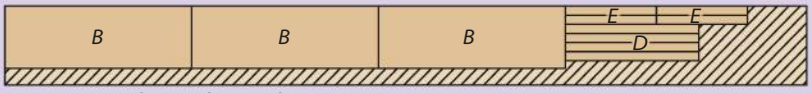

1" x 6½"- 60" White Oak (3.4 Bd. Ft.)

ALSO NEEDED: *¼" Baltic birch plywood, or ¼" hardboard to make four ½" x 26" splines*

Just Right Workbench

Create a shop centerpiece that fits anywhere and features all the qualities of a dependable workcenter.

Sometimes the ideals of woodworking bump into reality. One example is that you should have the largest possible workbench. This chestnut is usually attached to plans for an island-sized bench. If your space isn't large enough to handle it, then what?

Scaling down plans poses a Fire Swamp level of hazards. Creative director, Chris Fitch, answers the bell with this bench design. At just 56" long, it'll tuck in small spaces. More importantly the plans focus on the critical details: a strong, stout base and a thick, flat top. From this foundation, you can add some extras: versatile workholding, storage, and good looks — shop projects need to look good.

Let's start there. For the base, we used cherry. It's a traditional *Woodsmith* favorite, strong and attractive. For the top, we used hard maple, though beech and soft maple were considered as well. The preference is that light-colored benchtops are easier on the eyes while working. The two vises are easy to install and modestly priced.

Back in *Woodsmith* 261, Chris designed a router table with the same kind of spirit: compact, sturdy, and easy-to-build. Maybe this is the beginnings of a just right sized series of workshop furniture.

The inset vise features a reversible dog that fits into one of two positions for convenient clamping. A slot on the dog's face allows you to make custom auxiliary faces.

Written by: Phil Huber; Project Design: Chris Fitch

Illustrations: Dirk Ver Steeg

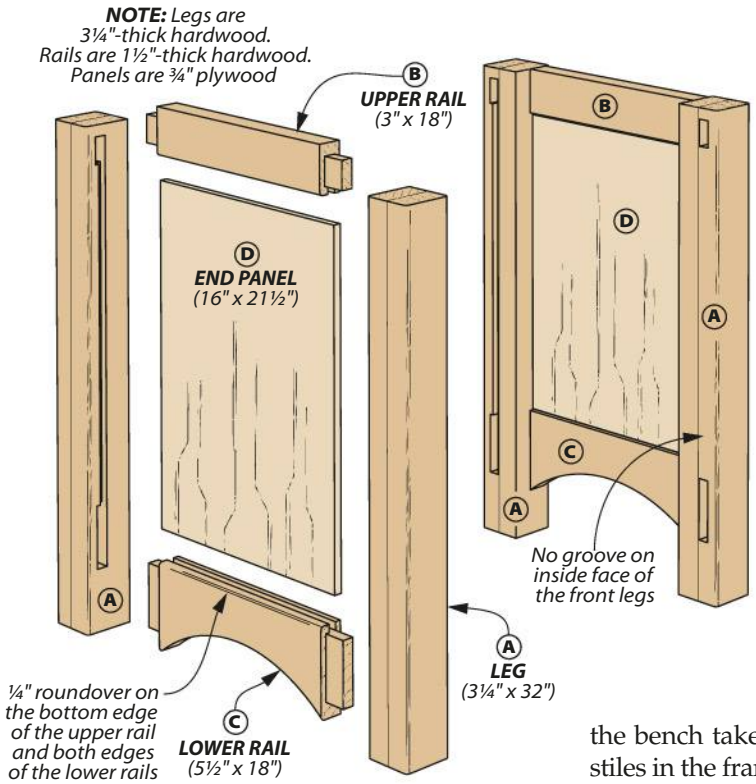

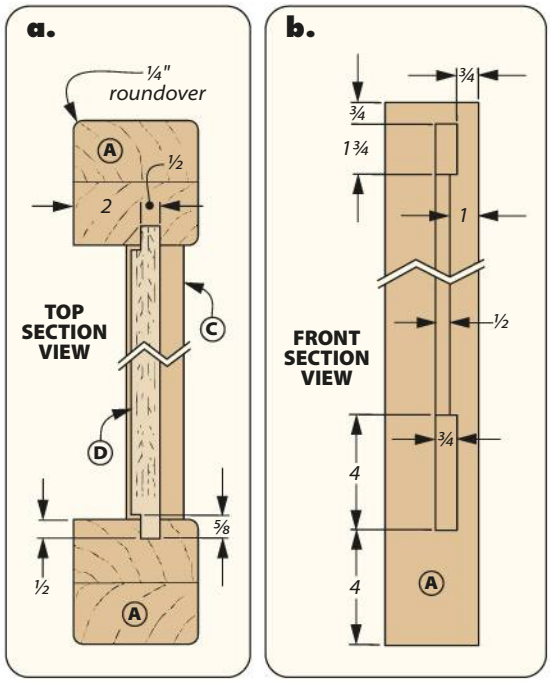

Post & Panel **ENDS**

In a chicken-and-egg sort of way, you could build the top of the bench first or the base. Either approach works. Here we'll start with the base.

The drawing above shows the basic structural units: the ends. They are a variation on frame and panel construction called post and panel. The thick legs of the bench take the place of the stiles in the frame.

MORTISES & GROOVES. Once the legs are glued up and sized, it's time for the joinery work. Details 'a' and 'b' show the mortises and stopped grooves that are required. Take note that front legs only have a groove along the back face.

For mortises of this size (3/4"-wide), I find that a Forstner bit and a drill press offer a reliable approach, as shown in Figure 1 below. Drilling out mortises is a common technique. The article on page 18 dives into the details to give you more confidence.

Grooves run from mortise to mortise to house the panels. Figure 2 illustrates how to do this with a plunge router equipped with an edge guide and a straight bit. Step down to the final depth in several passes to ease the stress on the bit and router motor.

Install a roundover bit to wrap up the work on the legs. The three outer corners of each leg get roundovers, as shown in detail 'a' above.

LEG MORTISES & GROOVES

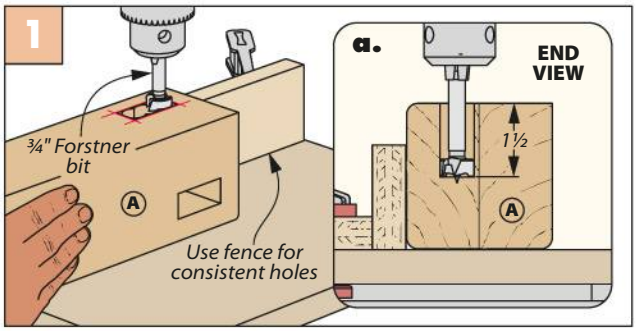

Rough Out the Mortises. A Forstner bit clears away most of the waste, leaving a little chisel work at the bench.

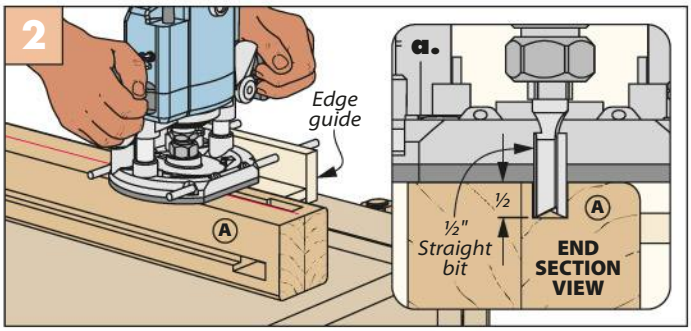

Take the Tool to the Work. A hand-held router gives you good visibility for cutting stopped grooves in the legs.

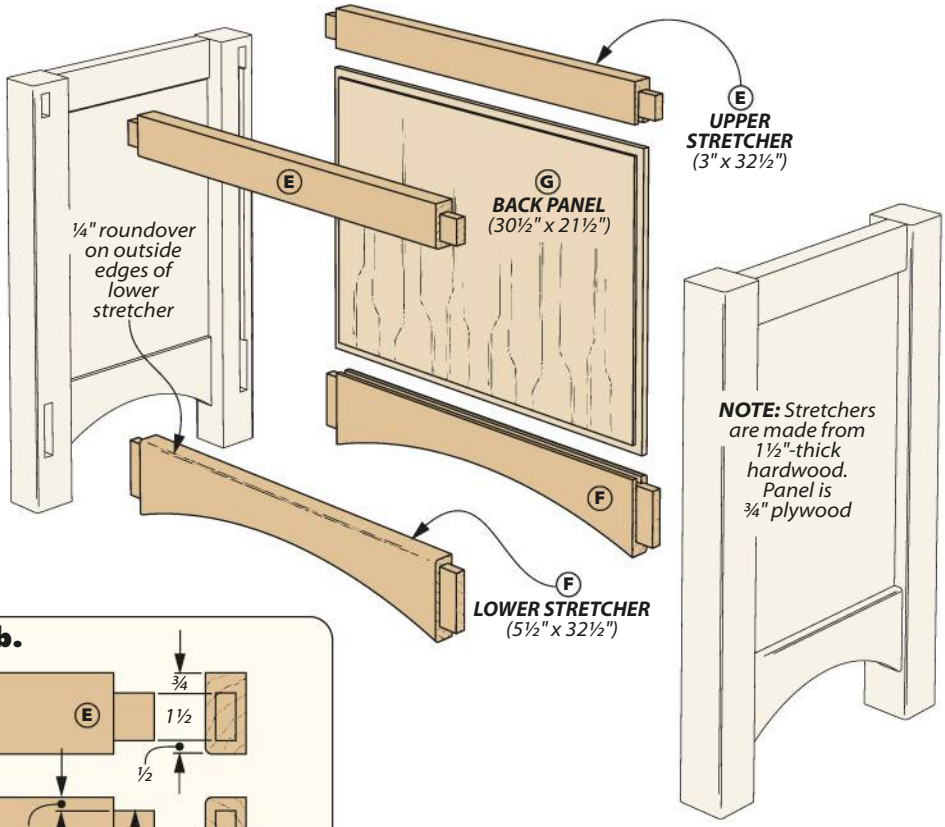

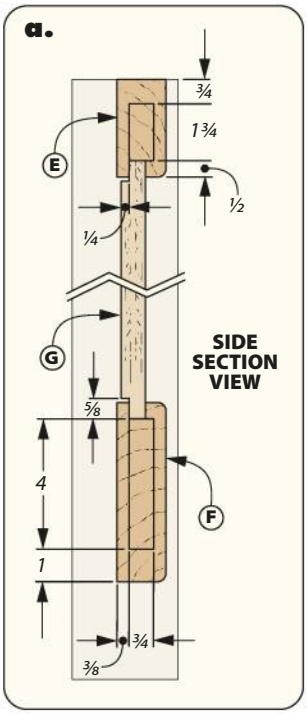

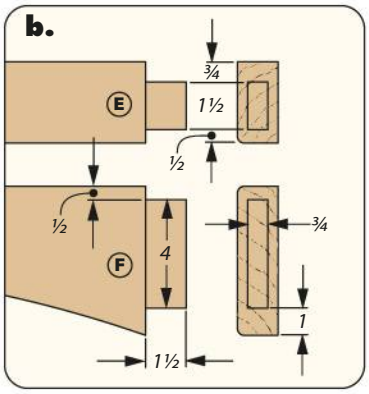

RAILS & PANELS. The rails form the other structural part of the end assemblies. Cut a tenon on each end of the rails. After fitting them to the mortises, mark the location of the grooves on the rails so they align with the grooves in the legs. Ideally, they're centered. "Trust, but verify" the Gipper advised.

The lower rails have an arc cut on the lower edge (drawing below). And the outer edges of all the rails are rounded over.

The panels are made from 3/4" plywood for increased strength. Wide rabbets on all the edges allow the joints to pull tight (detail 'a' on the previous page). Glue up the ends when the parts pass the dry-assembly test.

STRETCHERS

A handful of stretchers and one more panel bridge the end assemblies and create the base. We'll also add some visual flair here, too.

Four long stretchers are needed, as shown in the drawing above: two narrow upper ones and two wider lower stretchers. The first step here is cutting the tenons on the ends to fit the mortises in the legs, as you can see in detail 'b.'

The rear stretchers then need grooves to accept the plywood panel I mentioned earlier. This is shown in detail 'a.' Down below, the right drawing specifies the arc cut in the two lower stretchers. Once more, round over the outside edges of the stretchers.

PANEL & ASSEMBLY. Cut the plywood back panel to size. Rabbet the inside face so the resulting tongues fit the grooves.

Gluing up the base poses obstacles due to the size. I find that laying one end down offers a better starting point for gluing in the stretchers and panel. Then you can set the other end on top.

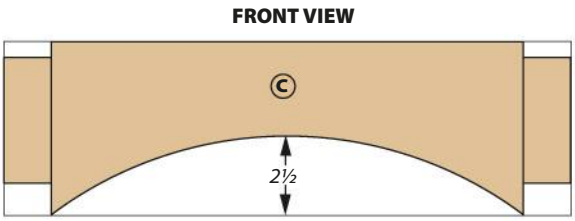

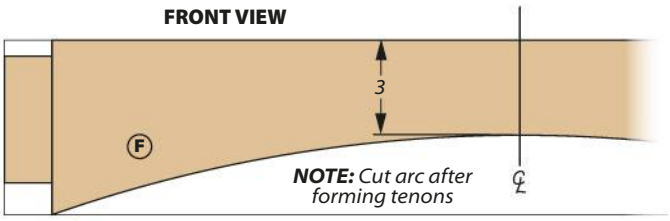

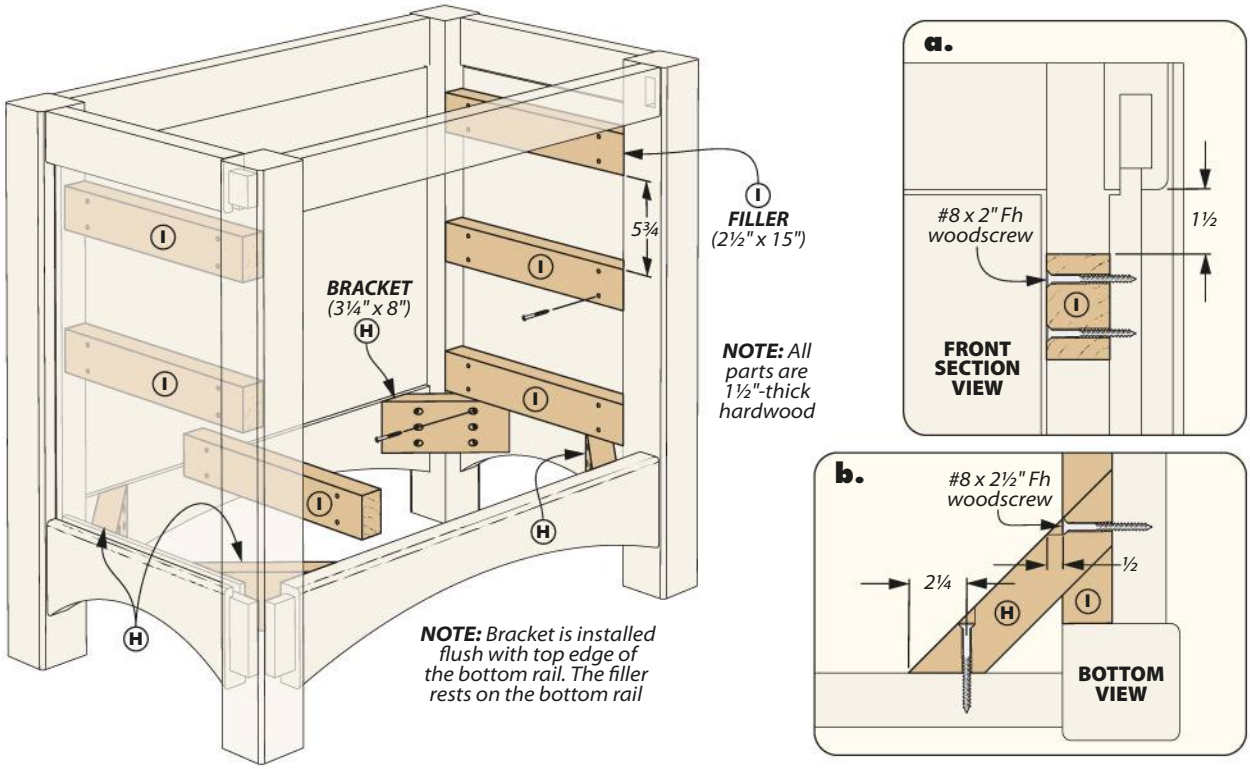

Loads of STORAGE

Open base workbenches promise flexible storage options with a big, clear space. That airy expanse invites clutter with a generous helping of dust and chips sprinkled on top. Not pleasant. This bench incorporates three large drawers in the base. No matter what the interior of the drawers look like, the outside is neat and tidy.

FORMING A TONGUE

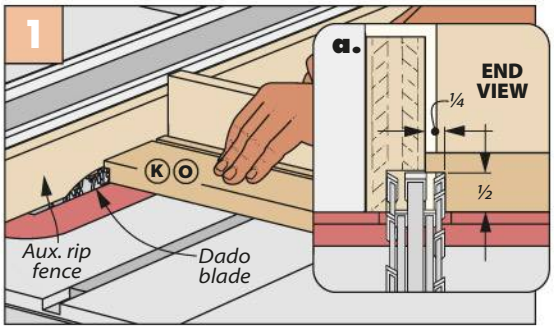

Cut a Rabbet. Size the tongue on the ends of the drawer fronts for a snug fit in the sides.

BRACKETS & FILLERS. There is a little interior work left before we can get to building the drawers. The base is pretty stout already, but I'm all for overbuilding.

In order to make the base more rigid, there are angled brackets attached to each lower corner. This is shown in the drawing above and in detail 'b.' The brackets are mitered on the ends and long enough so that they clear the inner corner of each leg.

For a solid connection, drill pilot holes so that the woodscrews run perpendicular into the stretchers and rails. The brackets are installed so that they are flush with the top edge of the stretchers and rails.

The drawers run on full-extension metal slides. We need to provide a mounting surface for the case component of each slide. Thick fillers serves that purpose, as you can see in detail 'a.' The thickness of the filler is the key dimension. This needs to match the offset from the inside of the legs to the panel.

This is a good place to use up some construction lumber or other scrap pieces you have lying around.

DRAWERS

I'm a drawer person when it comes to cabinets. Drawers (in my opinion) offer better access to items stored inside.

The three drawers in the bench base come in two sizes. A shallow top drawer holds smaller tools and supplies close at hand. Heavy and bulky items tuck away in the two larger drawers down below.

REINFORCED. Shop tools weigh more than sweaters, so these aren't your typical drawers. This means the drawers need to be bulked up. To get the strength we need, the drawer boxes are made from 3/4" plywood for the front, back, and sides. The bottoms are 1/2" plywood to prevent sagging.

The parts are sized for a 1/2" gap on each side for the drawer guide. The front corner joinery is shown in detail 'b' on the next page. It's tongue and dado. This interlocking connection registers the parts for assembly in addition

to increasing its strength. I prefer cutting the dadoes first, then fitting the tongues, as you can see in the box on the bottom of the previous page.

At the back of the drawers, the back fits into a full-width dado in the sides, as in detail 'd.' Both sets of joints are reinforced with screws (after assembly).

THICK BOTTOM. The drawer bottom rests in a narrow groove cut in the front, back, and sides (details 'a' and 'c'). The drawer bottom has a rabbet on all four edges forming a tongue to fit the groove, as shown in detail 'e.'

SLIDES & HANDLES. Assembling the drawers allows you to install the full-extension slides. I attached these so they were flush with the bottom of the drawer.

A PRETTY FACE. A false front wraps up each drawer and matches the look of the bench base, as in details 'b' and 'e.' Size the fronts for a consistent reveal. A roundover on the visible edges unifies the look with the other parts.

The last box to tick is adding a pair of handles to each drawer. These handles have caps that conceal the mounting screws.

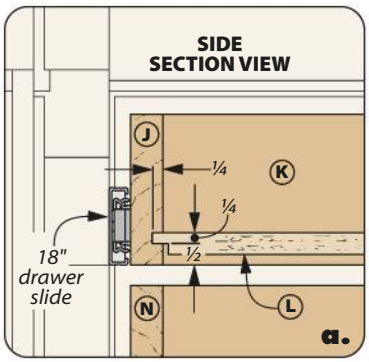

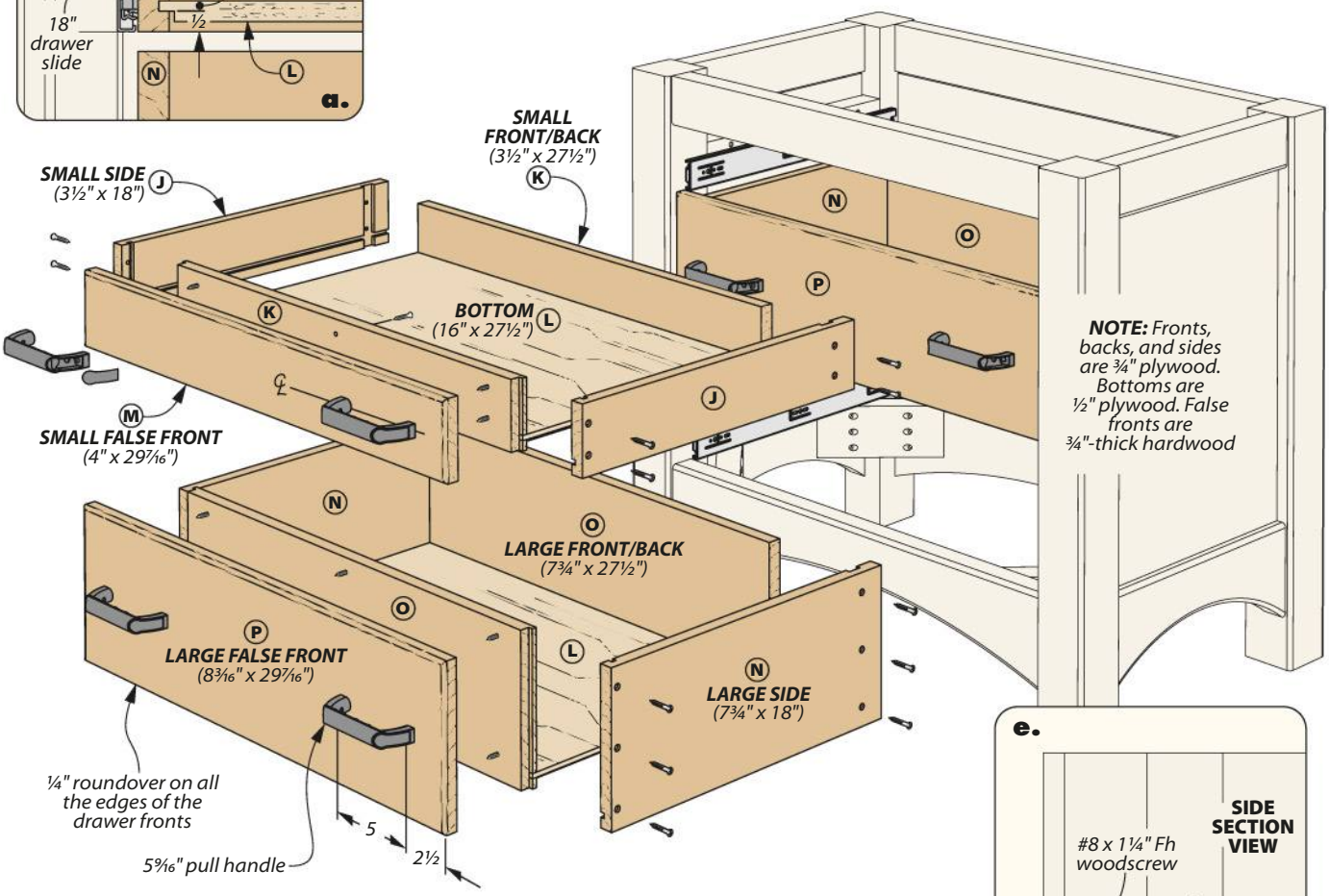

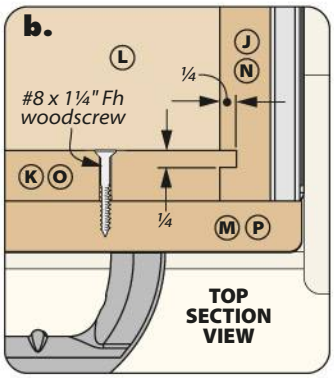

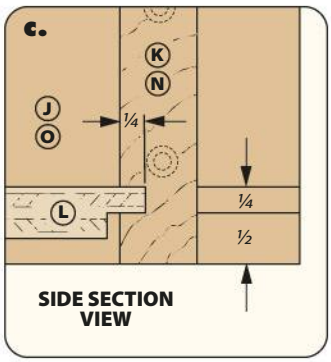

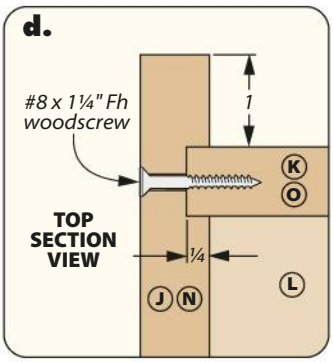

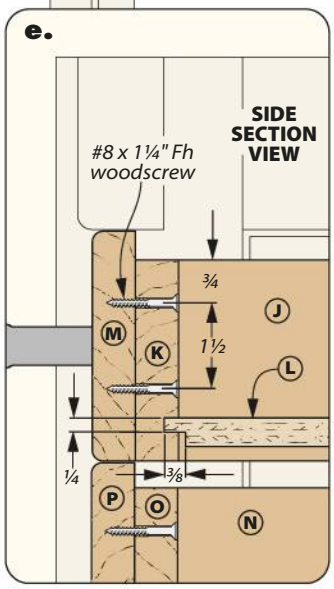

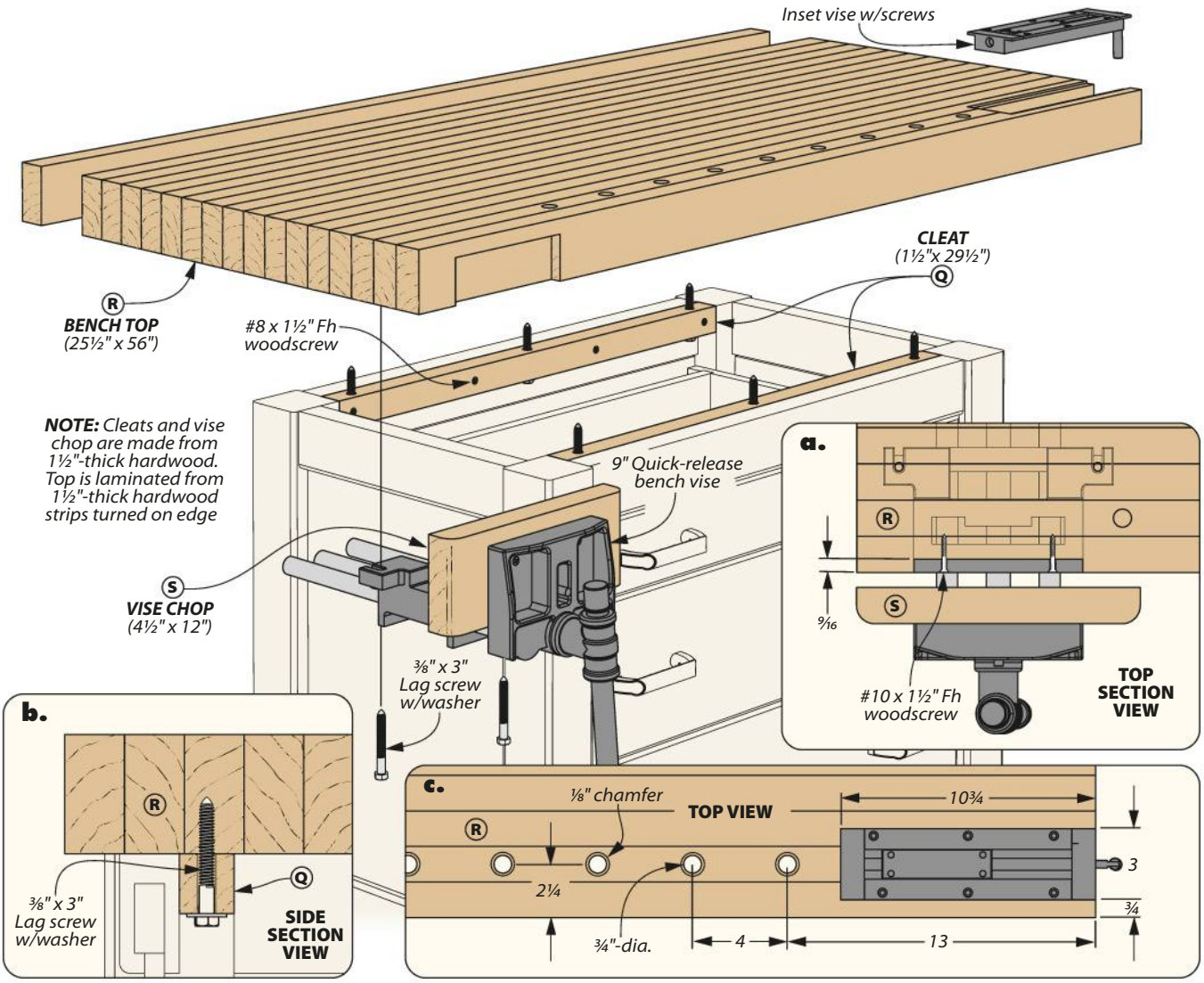

A laminated **BENCH TOP**

The bench top is a good place to go all out. Before getting to the top, we need to make and install a pair of cleats. This is how the top is attached to the base. The cleats are glued and screwed to the upper stretchers (detail 'b').

EDGE GRAIN TOP. The top is made from maple. As the drawing shows, it consists of strips turned on edge and glued together — like a large cutting board. The edge grain of hardwood is tougher than the face grain. This also gives the top a uniform, straight-grained look, which is less distracting for a worksurface.

Select the straightest boards you can. For the boards that bow, arrange them to oppose each other to balance the stress. Don't think you need to glue up the whole top at once. I find that gluing up smaller sections makes it easier to handle. And you can send those sections through the jointer and planer.

FACE VISE. On the front, I installed a quick-release vise. The only thing you need to do to install it (other than drill mounting holes), is to rout a pocket to recess the rear jaw for a continuous clamping surface. The locations are shown in detail 'a' above and Figure 1 on the next page.

INSET VISE. A vise at the end of a bench is a great add-on. I used an inset vise from *Veritas*. This vise fits into a stepped mortise (Figure 2). To install it, I taped strips to the top to define body of the vise and routed out the waste with a pattern bit. The details are show in Figure two on the next page. Square up the corners with a chisel. Reposition the guide strips to rout the shallow recess for the vise flange.

A row of bench dog holes drilled in line with the vise enables you to clamp long boards. The satisfaction of completing this sweet bench is only matched by the joy of using it. W

INSTALL VISES

Face Vise. The rear jaw of the vise is inset into the front edge of the workbench. This provides a flush surface for clamping a long workpiece and holding it securely. The vise is attached with lag screws from below and woodscrews through the front.

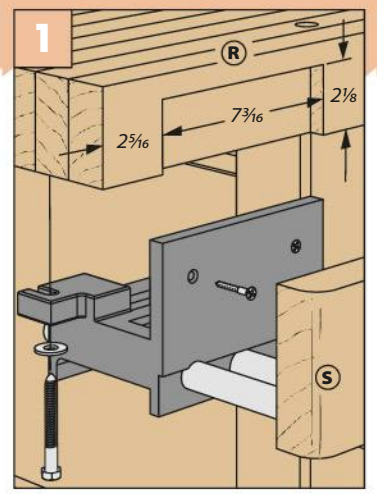

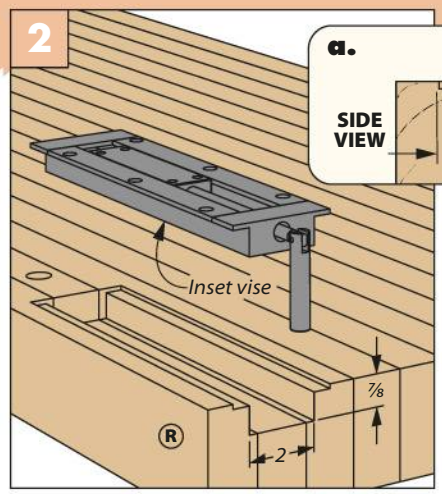

Inset Vise. The vise mechanism is contained in a single unit. You just need to rout a stepped mortise into the end of the bench to accommodate the hardware.

Materials, Supplies & Cutting Diagram

A	Legs (4)	3¼ x 3¼ - 32
B	Upper Rails (2)	1½ x 3 - 18
C	Lower Rails (2)	1½ x 5½ - 18
D	End Panels (2)	¾ ply. - 16 x 21½
E	Upper Stretchers (2)	1½ - 3 x 32½
F	Lower Stretchers (2)	1½ x 5½ - 32½
G	Back Panel (1)	¾ ply. - 30½ x 21½
H	Brackets (4)	1½ x 3¼ - 8
I	Fillers (6)	1½ x 2½ - 15
J	Small Sides (2)	¾ ply. - 3½ x 18
K	Small Front/Back (2)	¾ ply. - 3½ x 27½
L	Bottoms (3)	½ ply. - 16 x 27½
M	Small False Front (1)	¾ x 4 - 29⁷⁄₁₆
N	Large Sides (4)	¾ ply. - 7¾ x 18
O	Large Fronts/Backs (4)	¾ ply. - 7¾ x 27½
P	Large False Fronts (2)	¾ x 8³⁄₁₆ - 29⁷⁄₁₆
Q	Cleats (2)	1½ x 1½ - 29½
R	Bench Top (1)	3 x 25½ - 56
S	Vise Chop (1)	1½ x 4½ - 12

- (32) #8 x 2½" Fh Woodscrews
- (24) #8 x 2" Fh Woodscrews
- (50) #8 x 1¼" Fh Woodscrews
- (3 pr.) 18" Full-Extension Drawer Slides
- (6) 5⁹⁄₁₆" Pull Handles w/screws
- (1) 9" Quick-Release Vise
- (1) Inset Vise w/Screws
- (4) #10 x 1½" Fh Woodscrews
- (8) ⅜" x 3" Lag Screws
- (8) ⅜" Flat Washers

1¾" x 5"- 48" Hard Maple (3.4 Bd. Ft.)

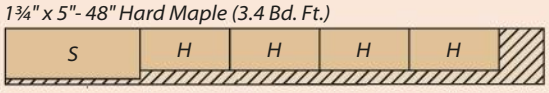

ALSO NEEDED: *One 48" x 48" sheet of ¾" cherry plywood, one 48" x 48" sheet of ¾" Baltic birch plywood, and one 24" x 96" sheet of ½" Baltic birch plywood*

1¾" x 6½"- 60" Hard Maple (Eight Boards @ 5.4 Bd. Ft. each)

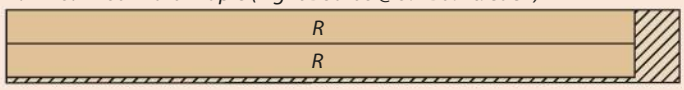

1¾" x 6"- 96" Hard Maple (8.0 Bd. Ft.)

1¾" x 7"- 84" Cherry (Two Boards @ 8.2 Bd. Ft. each)

1¾" x 8¾"- 84" Cherry (10.2 Bd. Ft.)

¾" x 8½"- 96" Cherry (5.7 Bd. Ft.)

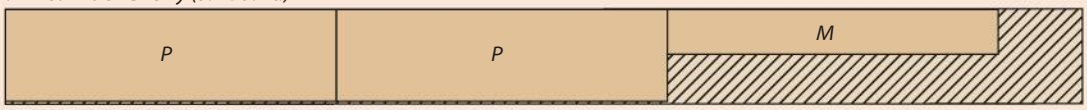

Written by: Rob Petrie; Project Design: Dillon Baker

Veranda Chair

One of the best ways to enjoy an idyllic summer day is sitting in a simple, elegant, and comfortable chair. This seat is all you could want.

▲ A series of gently curved ipe slats form the seat and backrest of this chair. Exterior tung oil will protect these slats for years.

▲ Hardwood stretchers connect the plywood sides. They screw into dadoes and provide a pleasant contrast to the paint.

As summer sneaks back into our lives, I always remember one of the simplest joys of a pleasant day: sitting. Whether you're enjoying the view, listening to the birds, reading a book, or just unwinding for a instant, it's these small moments that make me really appreciate the world around me. Of course, an integral part of this serene experience is where you're sitting.

Outdoor furniture can be just as varied as the indoor variety, and the intent plays into the designs just as much. This chair is meant for easy days, sitting comfortably in the summer sun. The wide, curved slats make for an accommodating seat, while the reclined shape of the sides and backrest invite you to take a moment, lean into the chair, and relax.

Materials are always an important factor for building outdoors, and this chair takes that into consideration. The sides are sturdy, built from Baltic birch, and sealed with epoxy before being painted, providing the plywood several layers of protection. In contrast, the hardwood stretchers and slats here are finished with an exterior-grade tung oil, making for a more raw look. Our wood of choice here was ipe — a dense, oily, tropical hardwood. While it isn't the easiest thing to work with, its durability will certainly pay off over the seasons. If ipe isn't quite to your taste though, don't worry. White oak or red cedar would work just as well for these solid-wood parts.

Illustrations: Bob Zimmerman

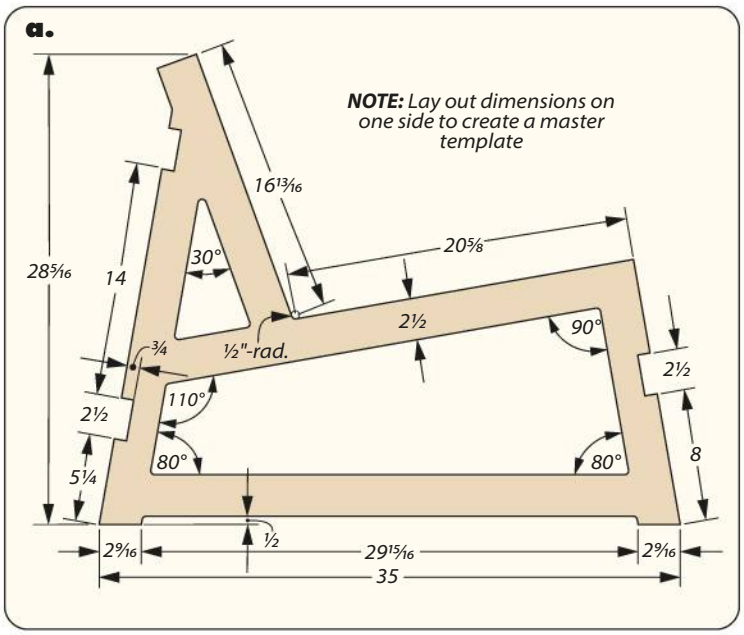

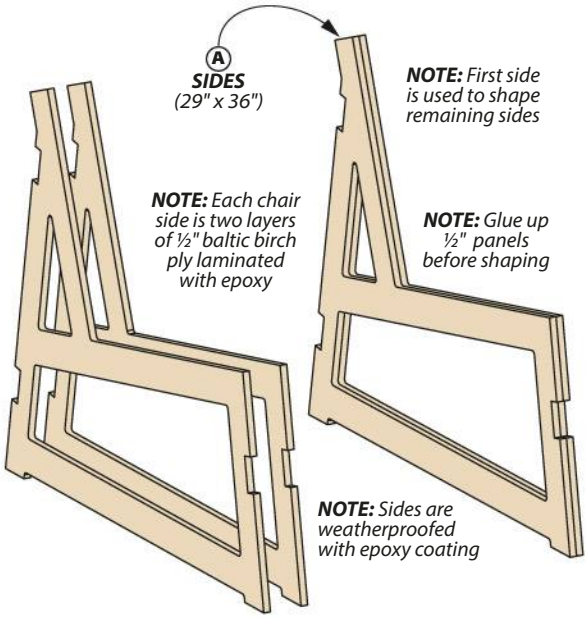

Sculpting the **SIDES**

The sides act as the frame of the chair, connected by the stretchers and supporting the slatted seat and back. Checking out detail 'a' above, you can see there's a bit going on here. It's easier than it looks however, and the first step is to prepare the blanks.

We used Baltic birch plywood to build the sides. We glued up two ½" panels for each side using epoxy. This helps with our weatherproofing later on. Once they were cured, it was time to work on the layout.

LAYING OUT THE SIDE. Detail 'a' provides the specifications for the sides. Draw this out on one panel — this will be the "master" template, whether it's just for the opposite side or a whole patio set's worth.

ROUGHING OUT. Shaping the sides begins with a jig saw (Figure 1). I first created the outer profile, following near the layout line but leaving some waste beside it. After making the rough exterior, I drilled out the radii for the interior cutouts. Once these were in, I used a jig saw to rough cut the interior as well.

CLEANING UP. Reaching the final shape of the sides is done at the router table. Using a flush trim bit and a guide (like a

MAKING IDENTICAL SIDE PIECES

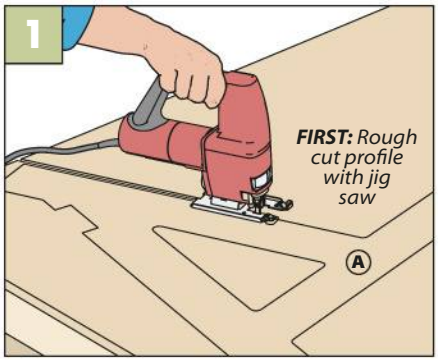

Layout & Roughing. After laying out the shape, rough-cut the profile of the side with a jig saw.

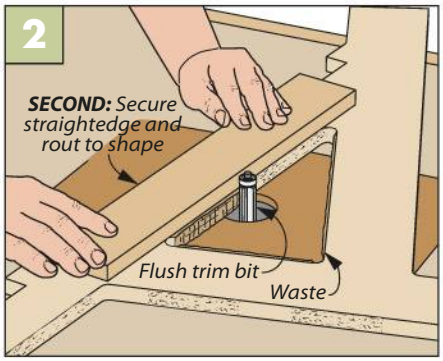

Clean Edges. Use a flush trim bit and a straightedge (attached with double-sided tape) to reach the final shape.

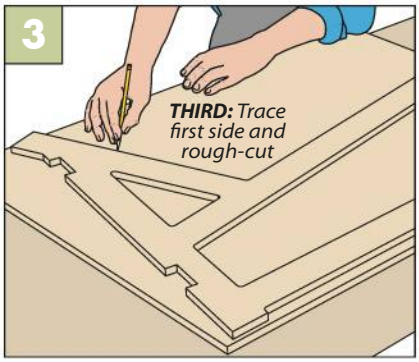

Using the Master. The first side acts as a master template for the rest. Use it to lay out as many as you need.

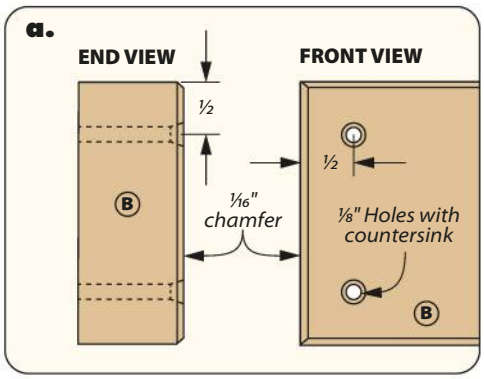

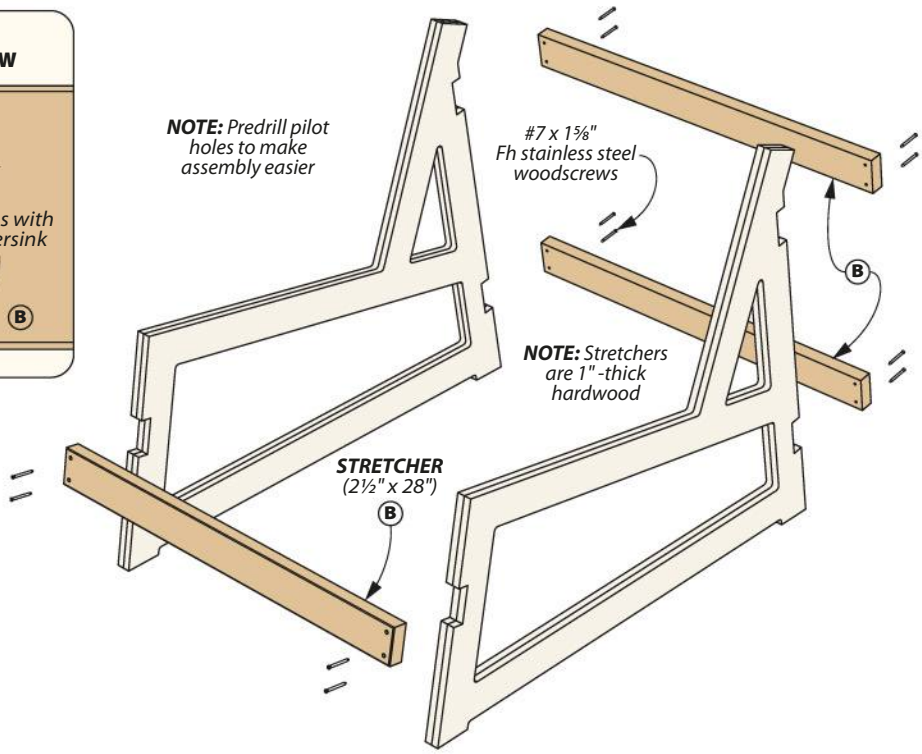

straightedge or a strip of hardboard, as in Figure 2) is a good way get a straight, clean edge. However, you will need to clean the corners of the notches for the stretchers by hand.

SUCCESSIVE SIDES. To shape the next sides, I traced the layout onto the pieces, as in Figure 3, and roughed out the profile and cutouts. From there I used the first side as a template, attaching it with double-sided tape. A pattern bit makes easy work of shaping, as you can see in Figure 4 below. Make as many sides as you need for your chairs, then clean up the corners of the notches by hand.

WEATHERPROOFING. The last step on these sides is to get them ready for a life outdoors. Baltic birch plywood is bonded with urea-formaldehyde glue, which is water resistant but not waterproof. While it'd be fine in the rain, the glue could deteriorate if it's exposed to moisture over a long period of time. To prevent that, we used epoxy.

While the edges were the most important to cover, we rolled all of the sides in epoxy as well (Figure 5). Once cured, I sanded them down lightly and painted them (source on page 66).

STRETCHERS

The stretchers join the two sides. They're simple pieces, and once you've cut them to size, chamfer their front edges (detail 'a'). Predrill the clearance and pilot holes, then clamp up the assembly while you drive in the screws to hold it all together.

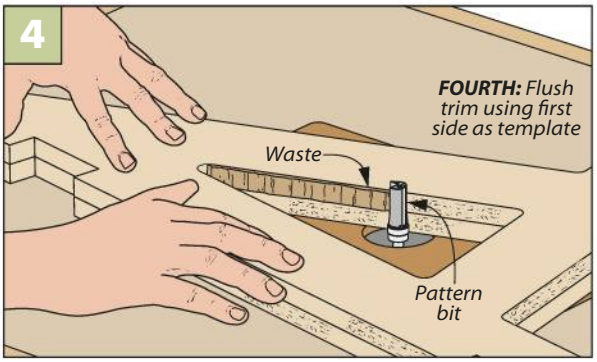

Flush-trimming. Rough shape the other sides, then tape the master side to them. A pattern bit then makes it easy to shape each one identically.

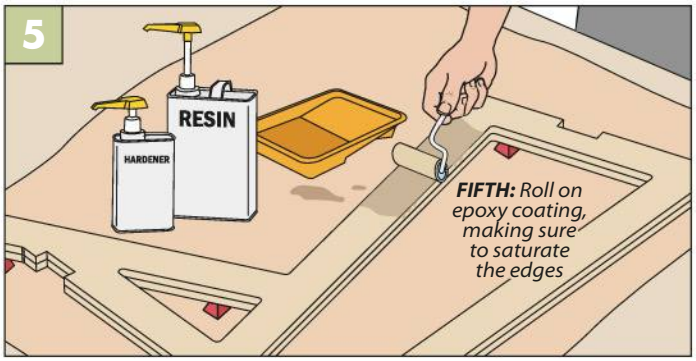

Epoxy Sealing. To make sure the plies in these sides stay together over the years outside, roll on a layer of epoxy to waterproof the plywood (more on this on page 64).

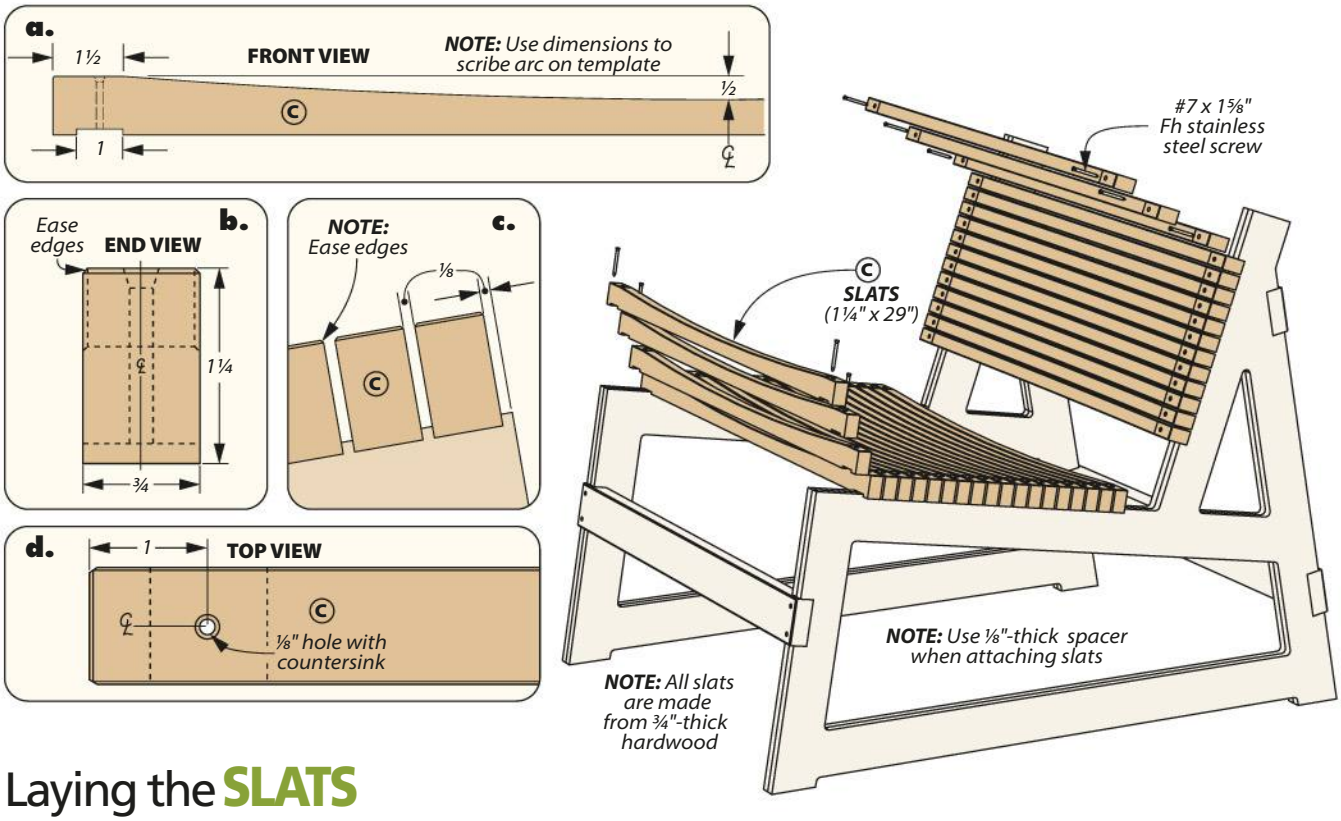

Laying the **SLATS**

The bones of the chair are in place, but to add in comfort the seat and the back still need to be made. As you can see in the main illustration above, they consist of a series of hardwood slats. We used ipe here. This dense, tropical hardwood is naturally resistant to many issues wood faces outdoors. Plus, I find an unusual wood like this is well-suited to simpler projects where it can shine on its own.

Begin by cutting these slats to size. After ripping them all, you can start shaping them.

DADOES. The first step on these slats is making the dadoes that fit over the sides of the chair. These are simple enough, but with 36 slats there's a good bit of work to be done. Begin by establishing the outside of the dado on each side (Figure 1). Once you make the first cut, flip the slat end for end and repeat. Do this for each slat first before adjusting to cut the rest of the dado. This will make sure each one stays consistent. For the second cut, remove the spacer and make another pass on each end of each slat.

AN ARMY OF DADOES

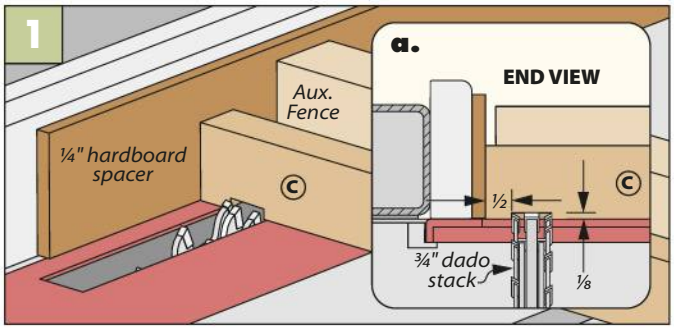

Initial Cut. Set up the cut using a piece of ¼" hardboard as a spacer (detail 'a'). Make the initial cut, then flip the piece and cut the opposite side as well. Do this for each slat.

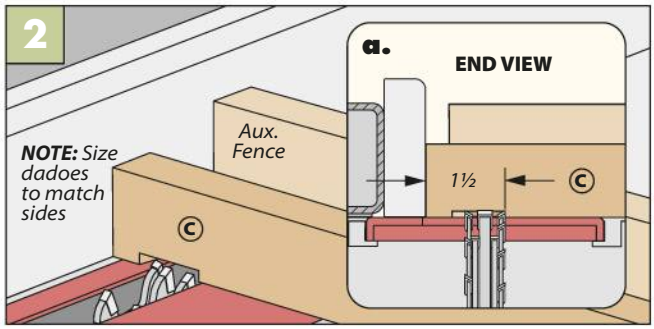

Finishing the Dadoes. Remove the hardboard spacer and finish the dadoes with another cut. Again, repeat this for each slat to maintain consistency on each piece.

CREATING THE SLAT CURVES

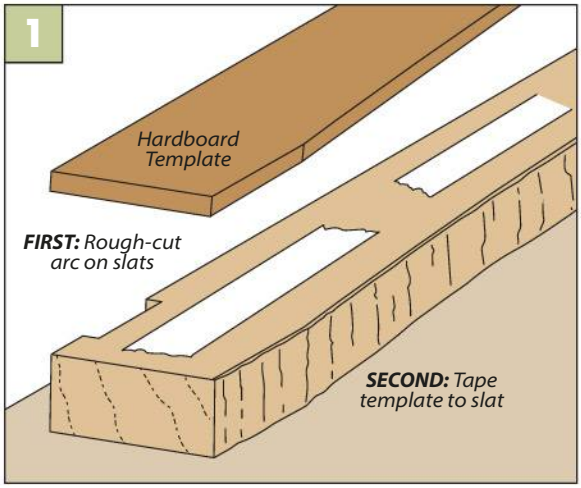

Initial Shape. First trace the template onto the slats and rough-cut them at the band saw. Then attach the template to the slats to rout them.

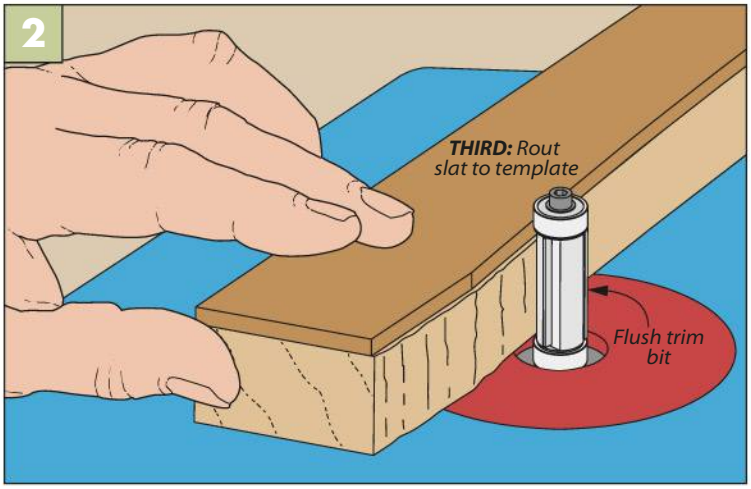

Flush Cut. For each slat, use a flush trim bit along with the template to shape the arc and clean the edges. Depending on how much waste remains, remove in small increments to avoid splintering or chipping.

TEMPLATE

Finishing up these slats will require a little work at the band saw, making a template, and lastly some routing to ensure each one ends up the same shape. As you can see in Figure 1 above, my template was simply a piece of hardboard that I had shaped to match the arc shown in detail 'a' on the previous page.

MAKING THE ARC. As always, getting a rough shape is the start. I did this by first tracing out the shape of the template on the slat I was working on. I took it over to the band saw and cut along the line, leaving a small bit of waste outside the layout lines to refine at the router table.

A flush trim bit will finish these slats for you. All you need to do is attach the template to the slat you're routing with double-sided tape (shown in Figure 1 above) and use it to register the bearing (Figure 2). Do this for each slat. If you're using ipe like we did, take your time on this routing, as ipe can be an awfully splintery wood at times.

PREDRILLING. Like with the stretchers, stainless steel screws are the fasteners of choice for these slats. Given how many there are, I recommend drilling clearance holes at the drill press using a fence and a stop.

INSTALLING THE SLATS. Before attaching these pieces, I gave them a few coats of an exterior-grade tung oil. Our source for this is on page 66, and you can read more on outdoor finishes in the article on page 62. To accurately space the slats, I used a small scrap of 1/8" hardboard (spacing shown in detail 'c,' previous page). The slats complete the project, leaving you with the perfect summer lounger. W

Materials, Supplies & Cutting Diagram (1 Chair)

A	Sides (2)	1"-ply - 28 5/16 x 35	**C**	Slats (36)	3/4 x 1 1/4 - 29
B	Stretchers (3)	1 x 2 1/2 - 28	•	(84) #7 x 1 5/8" Stainless Steel Screws	

ALSO NEEDED: *One 48" x 48" sheet and one 48" x 96" sheet of Baltic birch plywood*

3/4" x 6" - 96" Ipe (Three bds. @ 4.0 Bd. Ft. each)

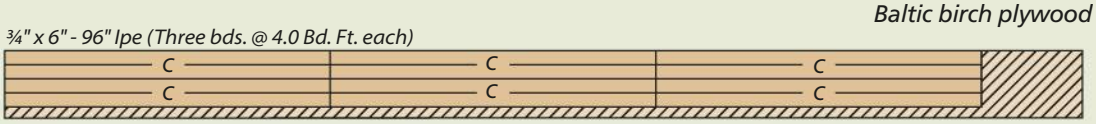

1"x 3" - 96" Ipe (2.5 Bd. Ft.)

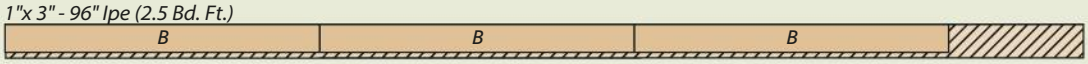

Finish for Outside

When the weather permits, nothing beats a deck or patio as the best place to spend time at home. And, as with any room inside, where you're sitting and the furniture that surrounds you can make all the difference. An outdoor table or comfortable lounger (like the one on page 26) is a rewarding project to build, and even more rewarding to enjoy with family and friends. However, outdoor pieces require some help to survive the elements.

INDOOR VS OUTDOOR FINISH. Outdoor furniture faces a number of adversaries that indoor projects are free from. Sunlight and moisture are obvious enemies, but insects and fungi (like mildew) are just as destructive. As such, outdoor finishes have means of dealing with each of these issues. UV inhibitors retain the wood's color, additives like fungicide prevent pests from eating the wood, and all outdoor finishes have some means of keeping out moisture.

There are a variety of outdoor finishes available, but they can be split into three categories: film-forming finishes, penetrative oils, and paint. Each offers varying degrees of protections for the wood, and comes with its own pros and cons.

FILM-FORMING FINISHES. The first outdoor finish I consider when making a project is a film-forming finish. Finishes such as spar varnish, exterior-grade polyurethanes, and deck sealers form a thin coat over the wood to

Written by: Rob Petrie

protect it. The coat is also transparent (or at least translucent), allowing you to enjoy the natural wood while still granting a layer of quality protection from the elements.

These finishes are similar to an interior varnish or polyurethane used indoors, but they're often mixed with more solids to form a thicker coat, along with UV inhibitors and mildewcides for added protection.

With all exterior finishes, it's important to consider how the piece will need to be refinished later on, and that's the downside to a film finish. Most film-forming finishes will last you for three to five years, depending on your location, and that's a repectable time. After that though, parts of the finish will begin to wear down and peel off. At that point, all of the finish must be sanded off before the whole piece can be refinished. While this finishing process can get tiresome, a film-forming finish is still an excellent choice of protection for pieces that need it, like the table above.

While film-forming finishes are available in clear versions, pigments will reflect certain light, offering some additional protection if the piece will be sitting in the sun.

▲ Film-forming finishes are similar to their indoor counterparts (like varnish and polyurethane), except they contain a higher concentration of solid materials. These solids create a more protective coat once cured, but tend to cost a bit more.

PENETRATING OIL. The second catagory of exterior finish is oil. Just like your typical finishing oil, rather than forming a layer over the wood to shield it a penetrating oil seeps into the wood to seal and protect it.

Aesthetically, oils offer a natural look to a piece. While the film of varnishes or polyurethanes will inevitably give a glossy look to the wood, oils offer a wider array of visual options.

The big benefit of using oil as an outdoor finish to me is the ease of refinishing. Oil will need to be reapplied more often than film finishes or paint (every year or so), but it couldn't be easier.

When it's time to refinish with an oil, you only need to clean the wood and reapply the oil. For this reason, I prefer exterior oils on pieces that would be difficult to strip entirely. This might be something larger, like a trellis or a pergola, or something like the bench below.

▲ While exterior oils don't offer a protective layer, they contain protective pigments, UV blockers, and fungicides.

▲ Exterior oils are great for benches like the one above, whose shape would make it difficult to strip and reapply a film finish. Instead, cleaning and reapplying the oil provides the wood with plenty of protection.

Illustrations: Bob Zimmerman

▲ Paint is one of the most practical options for an outdoor finish. It offers solid protection and easy application, with many paints having the primer already mixed in. While reapplication is more forgiving than film-finishes, you'll still want to strip off the previous layer of paint before applying a new one for the best results.

PAINT

Paint is, perhaps, the most straightforward finish. It's a practical choice that provides a long-lasting, protective coat to the wood. It's also easy to apply — even if you're not a master painter, chances are you can still pick up a brush or roller and get the job done.

Of course, paint has its big con: it covers up the wood. On certain projects, especially when using MDF and some plywoods, this can be great. However, it obviously won't be the right look for every project.

WEATHERPROOFING PLYWOOD

Woods like cedar or white oak are excellent for outdoor furniture, as are some plywoods — but not all. For instance, the urea-formaldehyde glue that binds Baltic birch is water resistant, but not waterproof, meaning that puddles and dewy mornings can still cause damage.

To weatherproof something like Baltic birch plywood, epoxy can be used to seal the plies and preserve the wood. This process is what we used to protect the Veranda Lounger on page 26 (pictured above).

First, the Baltic birch blanks we used needed to be glued up from two ½" pieces of plywood. We used epoxy to join them here as well. Once cured and shaped, we then used epoxy to seal up the wood. The edges were the most important to cover, but I epoxied the faces of the piece as well for maximum coverage. Once the epoxy coat cures, I lightly sanded the pieces and painted them using an exterior-grade paint (source on page 66). The epoxy will protect the plywood even if the paint gets worn or chipped before you refinish it. W

▲ Marine-grade epoxies are fantastic for outdoor projects. Having been designed for boats, they provide unparalleled protection against moisture.

▲ The edges are the weak points of Baltic birch plywood weather-wise. Rolling a coat of epoxy across the edges will seal the vulnerable edge grain from being weakened by water.

Woodsmith

Woodsmith Fine Tools Try Square & Scraper Combo

TRY SQUARE

Featuring a blued steel blade and a beech handle with a brass wearplate, this tool is both accurate and attractive. Invaluable for making sure your right angles are…right.

SCRAPER

Made from 0.036" (0.9mm) hardened and tempered high-carbon steel. Use to create a super-smooth, almost glassy surface on your fine furniture projects.

Item #EHTSET

***Try Square and Scraper Combo Set*.....$29** *

store.woodsmith.com

Woodsmith Fine Tools Steel Rule Combo Set

- ✓ **6", 12" & 18"** sizes for every application
- ✓ **Steel rules** with no-glare satin finish
- ✓ **Acid-etched graduations** won't wear off
- ✓ **Handy center-finding rule** on one face
- ✓ **1/16" and 1/32"** increments
- ✓ **Both left and right-reading** scales

As seen on the Woodsmith SHOP TV SHOW!

Item #364020

***Woodsmith Steel Rule Combo Set*.....$39.95** *

*Prices subject to change

RAZOR-SHARP EDGES in 5 Minutes!

The *Woodsmith* Cabinet Scraper System offers a fool-proof method for getting a consistent, razor-sharp edge using only a few simple tools. The secret is in the *Woodsmith* jig—a unique tool that lets you file the edge and then create the burr.

Item# 7512124

Woodsmith Cabinet Scraper System $59.99

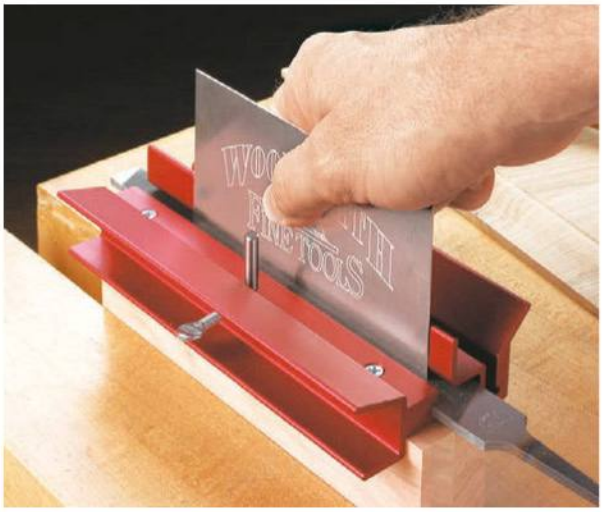

Sources

Most of the materials and supplies you'll need to build the projects are available at hardware stores or home centers. For specific products or hard-to-find items, take a look at the sources listed here. You'll find each part number listed by the company name. See the left margin for contact information.

MAIL ORDER SOURCES

Project supplies may be ordered from the following companies:

Woodsmith Store
800-444-7527
store.woodsmith.com

amazon.com

Benjamin Moore
benjaminmoore.com

General Finishes
800-783-6050
generalfinishes.com

Kreg Tool
800-447-8638
kregtool.com

Lee Valley
800-871-8158
leevalley.com

McMaster-Carr
630-833-0300
mcmaster.com

Microjig
855-747-7233
microjig.com

Nova
503-419-6407
novausawood.com

Rockler
800-279-4441
rockler.com

West Systems
866-937-8797
westsystem.com

Woodpeckers
800-752-0725
woodpeck.com

GREAT GEAR *(p.22)*

The three products shown can all be found on their manufacturer's website's.

- **Woodpeckers**
  Exact-90° Miter Gauge E90
- **Microjig**
  Grr-ripper2 Go GR2-GO
- **Kreg**
  Corner Guide Set PRS1000

SKITTLES GAME *(p.26)*

The Skittles Game was painted with three paint colors from *Benjamin Moore*: "Black" on the base, "Classic Gray" on the case and hood, and "Raspberry Truffle" on the sub-bottom to define the gutters. From there the table, cheeses, and pins were finished with two coats of spray lacquer.

CRAFTSMAN CHEST *(p.34)*

- **Rockler**
  Torsion Hinge 36275

The chest and was stained with *Varathane's* "Gunstock" stain and finished with a couple of coats of spray lacquer.

SIDE TABLE *(p.42)*

The side table is beautiful as is, just wipe it down with *General Finishes'* Seal-A-Cel.

WORKBENCH *(p.50)*

The Cherry used in the base of the workbench begs for an wiped-on oil finish to bring out the rich color. Once that dried, a couple coats of spray lacquer offer greater protection. The top of the bench has no finish — the raw maple looks fine as is.

- **Lee Valley**
  7" Bench Vise 10G0450
  Veritas Inset Vise 05G3101
- **McMaster Carr**
  18" Drawer Slides 2712A5
  Drawer Pull Handles 12375A72

VERANDA CHAIR *(p.56)*

To seal up the plywood sides of the chair, we used *West System*'s 105 epoxy and 205 fast hardener. We painted the sides with *Benjamin Moore*'s Regal Select Exterior paint in "York Harbor Yellow." For the stretchers and slats, we went with *Nova*'s "ExoShield," a quick-drying exterior tung oil.

Woodsmith® eTIPS

- **Valuable Video Tips** from the Woodsmith Shop TV Show
- **Quick & Easy Printable Tips** from Woodsmith Magazine
- **Latest Video Plans** from Woodsmith Plans

Sign Up Today For FREE Weekly eTips!

NOTHING Stops a DR®

There's a DR® for every corner of your property—See more equipment online!

Stump Grinders

Powerwagons

Rototillers

Lawn Mowers

Lawn & Garden Edgers

SALE!

FREE SHIPPING

SOME LIMITATIONS APPLY

Go online to request your FREE PRODUCT CATALOG

GoDRpower.com

DR POWER EQUIPMENT

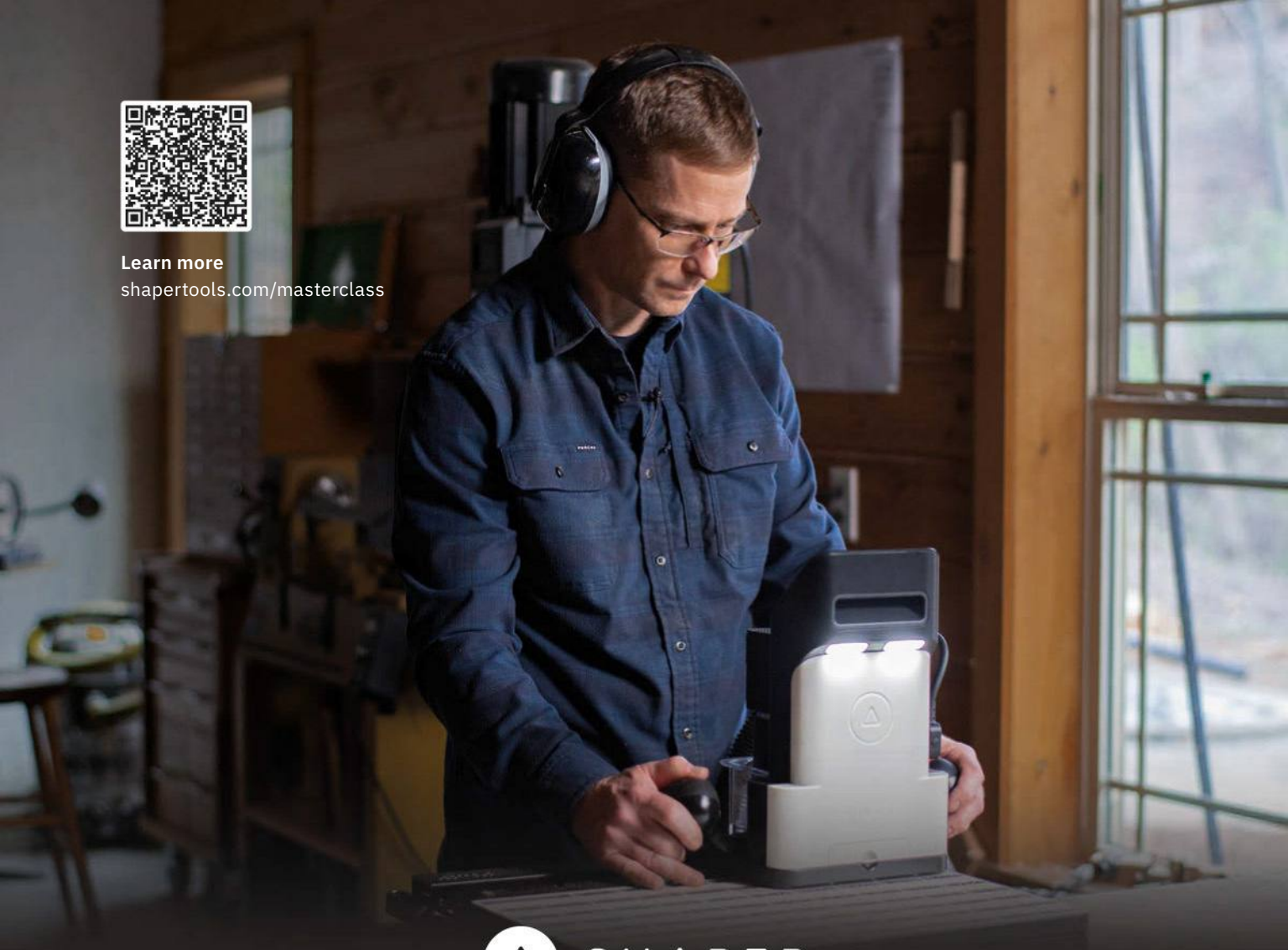

Learn more
shapertools.com/masterclass

SHAPER

PRECISION CUTTING SIMPLIFIED

ORIGIN

Shaper Origin is an easy-to-use handheld CNC router that brings digital precision to the craft of woodworking. Find out why more woodworkers like Caleb James rely on Shaper Origin in their shop to save time and make money.

shapertools.com